NBI-7803-AX Fixed camera 4MP HDRX 4.4-10mm

DINION 7100s

- Starlight X technology with 1/1.8" 4MP sensor
- HDR X - High Dynamic Range to see every detail in both bright and dark areas of the scene without HDR motion blur and artefacts
- IVA Pro brings highly reliable deep-learning based detection of persons and vehicles to scenes ranging from sterile to crowded and congested zones
- Electronic image stabilization (EIS) measures the frequency and amplitude of the device's vibrations to offset their impact on the image
- Easy and flexible installation

The NBI-7803-AX has a 1/1.8" sensor, starlight X and HDR X technology at 4MP resolution.
Starlight X technology provides extreme low-light sensitivity ensuring highly detailed images even in the most challenging situations. HDR X enables the camera to capture video across different light levels and without motion blur and artefacts on moving objects.
The latest CPP16 platform brings cameras with superb image quality into the IoT era, by offering enhanced processing capabilities and built-in neural processing engine that enables deep learning based IVA Pro video analytics. This advanced analytics technology delivers highly reliable detection of persons and vehicles, even in crowded or challenging environments.
With the combination of the device's flexibility, its easy installation, the exceptional image quality, and the new CPP16 platform, the NBI-7803-AX is the ideal choice for most mission-critical applications, including city and traffic monitoring, transportation and critical infrastructure.

Functions

Starlight X - Next level starlight performance
Starlight X technology combines the latest high performance, large pixel sensors, optics, improved image processing and noise suppression, resulting in a 70% improved sensitivity compared to the standard starlight camera.

HDR X - High Dynamic Range
HDR X technology combines unique sensor functionality and advanced algorithms. It captures high quality video of moving objects in scenes with a large dynamic range. It also allows HDR imaging at lower light levels in which traditional HDR technologies are non-functional.
This is possible because the HDR X - Motion optimized mode takes two different readouts from one exposure to capture details in both the highlights and shadows of the scene, instead of blending multiple exposures like standard HDR technologies. Blending multiple exposures reduces sharpness and creates unwanted imaging artefacts on moving objects. HDR X resolves these issues, providing a crisp image with improved dynamic range.
In case an even larger dynamic range is required, HDR X - Optimized DR or HDR X - Extreme DR will further increase performance to an absolute maximum by adding another fast exposure. This combines the benefits from HDR X - Motion optimized and traditional HDR.

Intelligent Video Analytics (IVA) Pro
The camera comes with IVA Pro Buildings, IVA Pro Perimeter, and IVA Pro Privacy pre-installed. Other options can be licensed to optimize the camera analytics for enhanced surveillance capabilities tailored to the application.

The advanced analytics brings highly reliable deep-learning-based detection and tracking of persons and vehicles to scenes ranging from sterile zones to crowded and congested areas. Resilient against false triggers caused by challenging environmental conditions such as rain, wind-induced movements (such as trees), snow, hail, water reflections, shadows, and insects, the camera ensures accurate and reliable object detection, tracking, and classification. A smart set of alarm and counter rules ensures that you are promptly alerted when predefined alarms are triggered.
Configuration effort is made easy with the camera already classifying objects out of the box. With these advanced features, the camera provides comprehensive security coverage across a wide range of environments and scenarios.

Intelligent Video Analytics Pro (IVA Pro) - optional licenses
With the introduction of IVA Pro Appearance, users can conduct forensic searches based on distinct characteristics, such as color of clothing, bags, hats, or other features, enabling a more precise search of individuals. Furthermore, the integration of IVA Pro Gun Detection enhances security measures by automatically detecting and classifying people brandishing firearms, ensuring comprehensive threat detection.
Additionally, the camera now features IVA Pro Personal Protective Equipment (PPE), designed to detect the proper use of personal protective equipment, which can reduce accident risk and promote health and safety in various environments.
IVA Pro Traffic can be licensed to optimize the camera analytics for ITS applications such as counting and classification, as well as Automatic Incident Detection, which are necessary for highway and urban infrastructure planning.

Camera Trainer
The Camera Trainer program uses machine learning to allow the user to define objects of interest and generate detectors for them.

Auto-calibration
The camera offers auto-calibration by transforming 2D pixels into 3D real world measures, such as size, speed and geolocation of objects for tracking use cases. AI technology allows the camera to detect and analyze persons and vehicles in the scene to determine calibration parameters. Calibration efforts are now reduced to a single click, followed by the usual human verification. This reduces the calibration effort or time investment, ensuring optimal accuracy while keeping costs to a minimum.

Intelligent streaming
Smart encoding capabilities, utilizing video analytics, reduce bandwidth consumption to extremely low levels. Only relevant information in the scene, such as motion or objects found through analytics, needs to be encoded. The camera is capable of quad streaming, allowing it to deliver independent and configurable streams for live viewing, recording, or remote monitoring via constrained bandwidths. Each of these streams can be adapted independently to deliver high-quality video, perfectly tailored to purpose, while reducing bit rate by up to 90% compared to a standard camera.

Electronic image stabilization
The image quality of a camera can be affected if its mounting is unstable or prone to vibration. The larger the zoom value, the bigger the impact of these vibrations will be, making images unusable and causing fatigue for the user. The camera's image stabilization algorithm uses the built-in gyro sensor to detect continuous vibration and to correct the shaky video in the vertical and horizontal axis. This results in a stable and smooth video on the monitor.

DORI coverage
DORI (Detect, Observe, Recognize, Identify) is a standard system (EN-62676-4) for defining the ability of a person viewing the video to distinguish persons or objects within a covered area. The maximum distance at which a camera/lens combination can meet these criteria is shown below:

4MP camera with 4.4 mm - 10 mm lens*

DORI	DORI definition	Distance	Horizontal width
Detect	25 px/m 8 px/ft	38 m / 121 m 118 ft / 377 ft	108 m 336 ft
Observe	63 px/m 19 px/ft	15 m / 48 m 50 ft / 159 ft	43 m 142 ft
Recognize	125 px/m 38 px/ft	8 m / 24 m 25 ft / 79 ft	22 m 71 ft
Identify	250 px/m 76 px/ft	4 m / 12 m 12 ft / 40 ft	11 m 35 ft

*The numbers in this table do not reflect IVA distances. For IVA distances, refer to the Design Hub.

Scene modes
Multiple configurable modes are provided with the best settings for a variety of applications. With one click, fully optimized image settings can be selected to suit the conditions. Different scene modes can be selected for different situations such as sodium lighting, fast moving objects or dark environments.

Data security

Security begins at production, where each device receives its unique cryptographic identity. From first boot, every layer protects data and ensures secure interactions through Secure Element 3.0 that provides enterprise-grade cybersecurity, strengthening system integrity from the inside out. Secure integration protocols protect connections with third-party systems, cloud platforms, and network infrastructure, while independent third-party certifications validate the Secure Product Lifecycle and supply chain practices. Systems remain protected, reliable, and aligned with modern regulatory standards.

Advanced edge recording

Advanced edge recording provides the reliable storage solution possible due to the combination of these functions:

- Industrial microSD card support allows for extreme lifetime
- Health monitoring of industrial microSD cards provide early service indications.

Cloud-based services

Using the Bosch Security Cloud, you can configure, troubleshoot, and update supported devices using the browser-based interface or standard tools. With one click on Remote Portal, you can activate additional value-added services, such as Alarm Management in Cloud VMS, or VideoView+.

VideoView+ provides an easy-to-use and cost-effective solution to remotely connect to your device from anywhere, at any time. Leverage the power of the Bosch cloud to monitor your premises and get notified about any incident. VideoView+ also enables live streaming, locally and from remote, of up to 8 concurrent devices via Video Security Client, or of up to 4 concurrent devices on the Android and iOS app clients. This includes replay and export functionality, as well as forensic search to define and perform search criteria for recorded events.

Bosch Remote Portal

With the secure cloud infrastructure, Remote Portal, you can manage your connected Bosch devices. From the Remote Portal you can:

- Complete initial configuration of your connected Bosch devices (online or offline).
- Update firmware for single or multiple devices.
- Manage certificates.
- Monitor the health of your connected Bosch devices.

System integration and ONVIF conformance

The camera conforms to ONVIF Profiles S, G, M, and T, ensuring interoperability with network video products across manufacturers and integration with third-party ONVIF compliant systems. For detailed ONVIF specifications, refer to onvif.org.

Project Assistant app

As the camera is equipped with a USB-C port for a Wireless installation dongle (sold separately: NCA-WLAN-EU, NCA-WLAN-NA), the installer can easily perform the initial configuration wirelessly. Using a mobile device with the Bosch Project Assistant app, you can do initial set-up and lens zoom-focus to find the right scene. Simply connect the wireless installation dongle and go to the Bosch Project Assistant app, available for iOS, Windows, or Android.

Regulatory information

Standards	Type
Emission	ANSI C63.4a, CISPR32 (Class A), EN IEC 61000-6-4, EN 50121-4, EN 55032 (Class A), CFR 47 FCC, part 15B (class A), ICES-003 Class A, RSS-Gen, Issue 5, VCCI-CISPR 32
Immunity	CISPR35, EN IEC 61000-6-2, EN 50121-4, EN 50130-4, EN 55035
Basic standards	EN 61000-4-2, EN 61000-4-3, EN 61000-4-4, EN 61000-4-5, EN 61000-4-6, EN 61000-4-8
Reliability	EN 50130-5 Class II-A, EN 60068-2-1, EN 60068-2-2, EN 60068-2-6, EN 60068-2-27, EN 60068-2-30, EN 60068-2-42, EN 60068-2-75, EN 60068-2-78
Safety	AN/NZS 62368.1, CSA C22.2 No. 62368-1, EN IEC 62368-1, GB 4943.1, IEC 62368-1, J62368-1, KC 62368-1, SASO-IEC 62368-1, UL 62368-1
Environment	2011/65/EU RoHS (EN IEC 63000), 1999/45/EC and 1907/2006 REACH, 2012/19/EU WEEE, 94/62/EC Packaging, DIN EN 62321 (PVC-free)
ONVIF conformance	IEC 626756-2-3, EN 60839-11-31, EN IEC 62676-2-31, EN IEC 62676-2-32
Marks	CE, cULus, WEEE, RCM, VCCI, FCC
Compliance	NDAA and TAA compliant

Region	Regulatory compliance/quality marks
Europe	CE

Installation/configuration notes

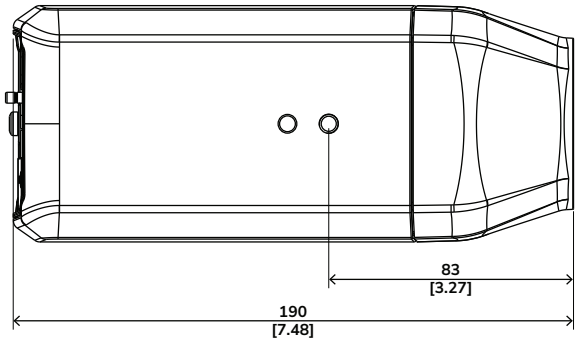

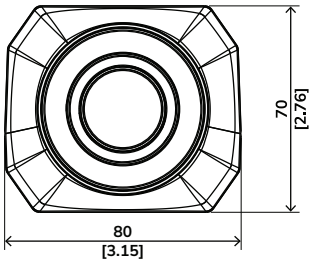

mm [in]

Parts included

Quantity	Component
1	NBI-7803-AX camera
1	Power connector
1	Data/Alarm connector, 14 pins
3	Identification label
1	Quick installation guide
1	Safety and security information

Technical specifications

Sensor

Sensor type	1/1.8 inch CMOS; 2.9 µm
Total sensor pixels	4.1 MP approx.
Effective pixels (H x V)	2,688 x 1,520

Sensitivity

Low light technology	starlight X
Color (lx) (sensitivity measured according to IEC 62676 Part 5)	0.009 lx
Monochrome (lx) (sensitivity measured according to IEC 62676 Part 5)	0.0008 lx

Dynamic range

WDR technology	HDR X
High Dynamic Range (HDR) (dB)	141 dB

Optical

Lens focal length (mm)	4.4 mm – 10 mm
Lens aperture (/F)	1.35 /F – 1.97 /F
Iris control	P-iris
Zoom/focus control	Motorized
Horizontal field of view (°)	110° – 48°
Vertical field of view (°)	53° – 27°

Platform

Common Product Platform	CPP16
Memory (MB)	4096 MB RAM; 8192 MB Flash

Video streaming

Video compression	H.264 (ISO/IEC 14496-10); M-JPEG; H.265/HEVC
Streaming	Multiple configurable streams in H.265; H.264 and M-JPEG; Configurable framerate and bandwidth; Bosch Intelligent Streaming
Frame rate (fps)	1 fps – 60 fps
Camera processing latency	<67ms
GOP structure	IP; IBP; IBBP
Video signal-to-noise ratio (dB)	>55 dB
Resolution	4.1 MP - 2688x1520 (16:9) 3.8 MP - 2592x1456 (16:9) 2.8 MP - 1920x1440 (4:3) crop 2 MP - 1920x1080 (16:9) 1.3 MP - 1280x1024 (5:4) crop 1.2 MP - 1280x960 (4:3) crop 1 MP - 1280x720 (16:9) 0.5 MP - 960x544 (16:9) 0.5 MP - 800x600 (4:3) crop VGA - 640x480 (4:3) crop 0.2 MP - 640x360 (16:9) 0.1 MP - 480x272 (16:9)

Video functions

Shutter modes	Automatic Electronic Shutter (AES); 1/15,000 max; Default shutter
Day/night modes	Auto (adjustable switch points); Color; Monochrome
Camera functionality	Backlight compensation (BLC); Contrast enhancement; Sharpness enhancement; Brightness
White balance (K)	2,000 K – 10,000 K
White balance modes	Basic; Standard; Manual mode; Hold mode; 3 automatic modes; Sodium lamp
Number of privacy masks	8
Display stamping	Name; Logo; Alarm message; Time
Scene modes	Standard; Sodium lighting; Vibrant; Sports & gaming; Retail; License plate recognition; Fast movement; Sensitivity boost; Color only
Positioning	Mounting height; Coordinates

Video content analysis

Analysis type	IVA Pro Buildings; IVA Pro Perimeter; IVA Pro Privacy
Alarm triggers	Any object; Object in field; Line crossing; Enter / leave field; Loitering; Follow route; Idle / removed object; Counting; Occupancy; Crowd density estimation; Condition change; Similarity search; Flow / counter flow; Objects stopping or starting to move
Object filters	Duration; Size; Aspect ratio; Speed; Direction; Color; Object classes (6)
Tracking modes	Standard (2D) tracking; 3D tracking; 3D people tracking; Ship tracking; Museum mode
Calibration	Automatic based on gyro sensor, focal length, and camera height
Number of possible alarm rules (simultaneously)	16
Additional functionalities	Tamper detection
Supported analytics	IVA Pro Traffic; IVA Pro Appearance; IVA Pro Visual Gun Detection; IVA Pro Personal Protective Equipment

Storage

Internal storage	5-s-pre-alarm-recording
Memory card slot	Micro SDHC; Micro SDXC; Micro SD
Industrial SD cards	Extreme lifetime and health monitoring support that provides early service indication
Recording mode	Continuous (ring); Scheduled; Alarm; Event

Inputs and outputs

Ethernet	Shielded RJ45
Audio line in	10 kOhm typical; max. 1 Vrms
Audio line out	1.5 kOhm typical; 1 Vrms
Alarm inputs	2; Dry contact; 5 - 40 VDC; 2.2 K end-of-line resistor
Alarm outputs	1; max 30 VAC; +40 VDC; 0.5 A; continuous 10 VA
Surge protection	1 kV; 1 kA to ground (8/20 µs)
Analog video output	CVBS: 1.0 Vp-p/75ohm composite 720 x 480 (NTSC), 720 x 576 (PAL) for installation and continuous output
USB	USB 2.0 Type C, for use with Wireless installation dongle for setup and commissioning (sold separately)

Audio

Compression and sampling rate	G.711 8 kHz; L16 16 kHz; AAC-LC 80kbps 16 kHz; AAC-LC 48kbps 16 kHz
Minimum signal-to-noise ratio (dB)	>50 dB
Audio streaming	Full duplex; Half duplex

Network

Protocols / standards	IPv4; IPv6; UDP; TCP; HTTP; HTTPS; RTP/RTCP; IGMP V2/V3; ICMPv6; RTSP; FTP; ARP; DHCP; APIPA (Auto-IP, link local address); NTP (SNTP); SNMP (V1, MIBII); SNMP (V3, MIBII); 802.1x, EAP/TLS; DNS; DNSv6; SMTP; iSCSI; DiffServ (QoS); LLDP; SOAP; CHAP; Digest authentication; RTSPS; SRTP; SCEP
Ethernet type	10/100/1000BASE-T; Auto-sensing; Full / half duplex

Conformity	ONVIF Profile S; ONVIF Profile G; ONVIF Profile T; Auto-MDIX; ONVIF Profile M

Data security

Cryptographic coprocessor (SE)	CC EAL6+; RSA 4096 bit; 512-bit ECC elliptic curves; AES/CBC 256 bit
Public Key Infrastructure (PKI)	X.509 certificates; SCEP; Device identity certificate (Root CA); Embedded firewall
Encryption	TLS 1.2; AES 256; AES 128; TLS 1.3
Network authentication	802.1x; EAP/TLS; CHAP; Digest authentication; Configurable session timeout
Local storage encryption	AES-XTS
Signed video framework	MD5; SHA-1; SHA-256; Checksum
Firmware protection	Signed firmware; Secure boot; Software sealing; SBOM (Software Bill of Materials); Cloud firmware check
Certified security standards	Common Criteria EAL6+ (Secure Element 3.0); FIPS 140-3 Level 3 (Secure Element 3.0)

Electrical

PoE input	PoE IEEE 802.3at Type 1, Class 3, PoE 57 VDC, 0.3A, 12.95W PoE and auxiliary power can be connected simultaneously for redundant operation
Input voltage (VAC)	24 VAC ±10%, 50/60Hz, 0.85A, 14W
Input voltage (VDC)	12 VDC – 26 VDC ±10%; 1.3A, 14W

Mechanical

Material	Aluminum; Polycarbonate
Dimensions (H x W x D) (mm)	70 mm x 80 mm x 190 mm
Dimensions (H x W x D) (in)	2.76 in x 3.15 in x 7.48 in
Weight (g)	760 g
Weight (lb)	1.68 lb
Color (RAL)	RAL 9003 Signal white; RAL 9017 Traffic black
Mounting type	Top and bottom 1/4" 20 UNC, <0.29" (7.5 mm)

Environmental

Operating temperature (°C)	-20 °C – 55 °C
Operating temperature (°F)	-4 °F – 131 °F
Storage temperature (°C)	-30 °C – 70 °C
Storage temperature (°F)	-22 °F – 158 °F
Cold start temperature (°C)	-20 °C
Cold start temperature (°F)	-4 °F
Operating relative humidity, non-condensing (%)	5% – 93%
Storage relative humidity (%)	0% – 98%
Ingress protection	IP5X
Country of origin	Portugal

Ordering information

NBI-7803-AX Fixed camera 4MP HDRX 4.4-10mm
Fixed box camera 4MP with starlight X, HDR X, IVA Pro Buildings, IVA Pro Perimeter, IVA Pro Privacy, H.265, 4.4-10 mm integrated lens
NDAA and TAA compliant
Order number **NBI-7803-AX**

Accessories

UHO-HBGS-11 Outdoor housing, 24VAC, feed-through
Outdoor housing for (24 VAC / 12 VDC) camera with 24 VAC power supply, blower and feed-through cabling.
Order number **UHO-HBGS-11**

UHO-HBGS-51 Outdoor housing, blower, 230VAC/35W
Outdoor housing for (230 VAC / 12 VDC) camera with 230 VAC power supply, blower and feed-through cabling.
Order number **UHO-HBGS-51**

UHO-HBGS-61 Outdoor housing, blower, 120VAC/35W
Outdoor housing for (120 VAC / 12 VDC) camera. 120 VAC power supply; blower; feed-through cabling
Order number **UHO-HBGS-61**

UHO-POE-10 POE outdoor housing, heater, blower
Outdoor camera housing with PoE+ power supply.
Order number **UHO-POE-10**

VSP-UHO-POE-10 PoE outdoor housing IK10, heater, blower
Outdoor camera housing with PoE+ power supply; IK10.
Order number **VSP-UHO-POE-10**

LTC 9219/01 Feed through J mount
J-mount for camera housing, 40 cm (15 in).
Order number **LTC 9219/01**

LTC 9210/01 Column mount, 8", 5KG/11lb load
Feed-through column mount for 20 cm (8 in), 5 kg (11 lb) maximum load; light gray finish.
Order number **LTC 9210/01**

LTC 9213/01 Pole mount adapter for LTC9210,9212,9215
Flexible pole mount adapter for camera mounts (use together with the appropriate wall mount bracket). Max. 9 kg (20 lb); 3 to 15 inch diameter pole; stainless steel straps
Order number **LTC 9213/01**

LTC 9215/00 Wall mount with cable feed through, 12"
Wall mount for camera housing, cable feed-through, 30 cm (12 in).
Order number **LTC 9215/00**

LTC 9215/00S Wall mount for UHI/UHO
Wall mount for camera housing, cable feed-through, 18 cm (7 in).
Order number **LTC 9215/00S**

TC9210U Camera mount, 6", indoor
A universal 6-inch wall/ceiling grid with off-white finish for 4.5 kg (10 lb) max load, incl. T-Bar ceiling clip and wall/ceiling mount flange.
Order number **TC9210U**

IIR-50850-SR Illuminator, 850nm, short range
Short range IR illuminator
850 nm
Order number **IIR-50850-SR**

IIR-50940-SR Illuminator, 940nm, short range
Short range IR illuminator
940 nm
Order number **IIR-50940-SR**

IIR-50850-MR Illuminator, 850nm, medium range
Medium range IR illuminator
850 nm
Order number **IIR-50850-MR**

IIR-50940-MR Illuminator, 940nm, medium range
Medium range IR illuminator
940 nm
Order number **IIR-50940-MR**

IIR-50850-LR Illuminator, 850nm, long range
Long range IR illuminator
850 nm
Order number **IIR-50850-LR**

IIR-50940-LR Illuminator, 940nm, long range
Long range IR illuminator
940 nm
Order number **IIR-50940-LR**

IIR-50850-XR Illuminator, 850nm, extra range
Extra long range IR illuminator
850 nm
Order number **IIR-50850-XR**

IIR-50940-XR Illuminator, 940nm, extra range
Extra long range IR illuminator
940 nm
Order number **IIR-50940-XR**

NBN-MCSMB-03M Cable, SMB to BNC, camera-cable, 0.3m
0.3 m (1 ft) analog cable, SMB (female) to BNC (female) to connect camera to coaxial cable
Order number **NBN-MCSMB-03M**

NBN-MCSMB-30M Cable, SMB to BNC, camera-monitor/ DVR
3 m (9 ft) analog cable, SMB (female) to BNC (male) to connect camera to monitor or DVR
Order number **NBN-MCSMB-30M**

NPD-5001-POE Midspan, 15W, single port, AC in
Power-over-Ethernet midspan injector for use with PoE enabled cameras; 15.4 W, 1-port
Weight: 200 g (0.44 lb)
Order number **NPD-5001-POE**

NPD-5004-POE Midspan, 4 port x 15W, AC in
Power-over-Ethernet midspan injector for use with PoE enabled cameras; 15.4 W, 4-ports
Weight: 620 g (1.4 lb)
Order number **NPD-5004-POE**

MSD-064G IP SECURITY MICROSD CARD 64GB
64 GB industrial microSD card with health status monitoring
Order number **MSD-064G**

MSD-128G IP SECURITY MICROSD CARD 128GB
128 GB industrial microSD card with health status monitoring
Order number **MSD-128G**

MSD-256G IP SECURITY MICROSD CARD 256GB
256 GB industrial microSD card with health status monitoring
Order number **MSD-256G**

NCA-WLAN-EU Wireless installation dongle EU
Wireless installation dongle for wireless commissioning
Order number **NCA-WLAN-EU**

NCA-WLAN-NA Wireless installation dongle NA
Wireless installation dongle for wireless commissioning for North America
Order number **NCA-WLAN-NA**

UPA-2450-50 PSU, 220VAC 50Hz, 24VAC 50VA out
Indoor power supply for camera. 220 VAC, 50 Hz in; 24 VAC, 50 VA out
Order number **UPA-2450-50**

Software Options

MVC-IVA-TRA IVA Pro Traffic
Video analytics software based on deep neural network technology for traffic monitoring and Automatic Incident Detection.
Order number **MVC-IVA-TRA**

MVC-IVA-APC IVA Pro Appearance
Video analytics software based on deep neural network technology for detailed person appearance attributes allowing advanced forensic search.
Order number **MVC-IVA-APC**

MVC-IVA-VGD IVA Pro Visual Gun Detection
Video analytics software based on deep neural network technology, designed to detect upright persons and brandished guns.
Order number **MVC-IVA-VGD**

MVC-IVA-PPE IVA Pro PPE
Video analytics software based on deep neural network technology for detecting personal protective equipment.
Order number **MVC-IVA-PPE**

https://www.iqsight.com

© IQSIGHT 2026