Semi-auto Tripod Turnstile Manual

WJAT215

Version: V2.0

(The second version)

Note: pictures in the Manual are just for reference, and there will be no further notice if any pictures are changed.

Contents

1. Product Introduction ---------- 1

2. Specifications ---------- 1

3. Features and Functions ---------- 1

4. Mechanism Dimension and Structure ---------- 2

5. Mechanism Operation Principle ---------- 4

6. Installation and Adjustment Explanation ---------- 5

7. Electrical Diagram and Connection ---------- 5

8. Warranty and Service ---------- 7

9. Packing List ---------- 7

Notes: after working long time, the electro-magnet and the control board would heat up slightly and this is a normal phenomenon. Please make sure all these parts cool before doing the routine maintenance.

1. Product Introduction

This series of turnstile is manufactured by precise mould craft. It is with a simple design and has a durable and reliable quality. This turnstile can work with access control system, time attendance system and parking management system. It has fire alarm function in high conformity with fire protection.

2. Specifications

2.1. Power Supply: DC12V
2.2 Motor Voltage: DC12V
2.3 Power: 36W
2.4.Working Temperature: -25℃~+55℃
2.5 Relative Humidity: ≤95% with no condensation.
2.6 Motor Dimension: 304*285*150MM（L*W*H）
2.7 Turnstile Arm Length: 490mm
2.8. Max Bearable Weight: 80KGS
2.9 Arm Drive Force: ＜3KGS
2.10. Installation Site: Outdoors and indoors
2.11 Passenger Flow: 25~35 persons per minute
2.12. Input interface: dry contact with the pulse between 200ms~500ms
2.13. Output interface: counter output, relay signal output of Com, NO, NC, with low level signal of 200ms; Compatible with various input interfaces.

3. Features and Functions

3.1 A compact electro-mechanical design with an exquisite rotating plate and a self-lock mechanism
3.2 Passable for bi-direction
3.3 Self-locking within 5 seconds if there is no one passing after signal activation
3.4 Arm auto dropping when power off and manually put the arm up when power on
3.5. Person counter output is available to indicating passenger quantity; the pulse is 200MS
3.6. Unauthorized opposite directional passing is prohibited

3.7 Fire alarm emergency signal output: if with arm auto drop function, the arm will drop automatically after signal activation; if not, the arm rotating plate can operate freely and there is alarm after signal activation

3.8 Input interfaces available for left access(L), right access(R), emergency(EM), GND; EM is in priority; NO electrical replay output with pulse between 200MS~500MS; EM signal should maintain connected when any emergency happens.

3.9 Output interfaces: left and right counter output are both with COM/NO/NC relay output, which is able to distinguish flow of both direction. This signal can be connected to systems, indicating passengers'passing or not passing state.

3.10 Emergency Alarm interfaces available for alarm equipments under 12W or DC12V

4. Mechanism Dimension and Structure

4.1 Mechanism Dimension

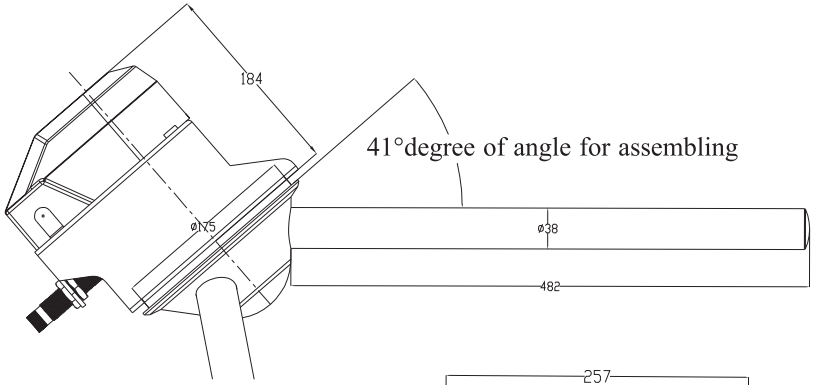

Side View

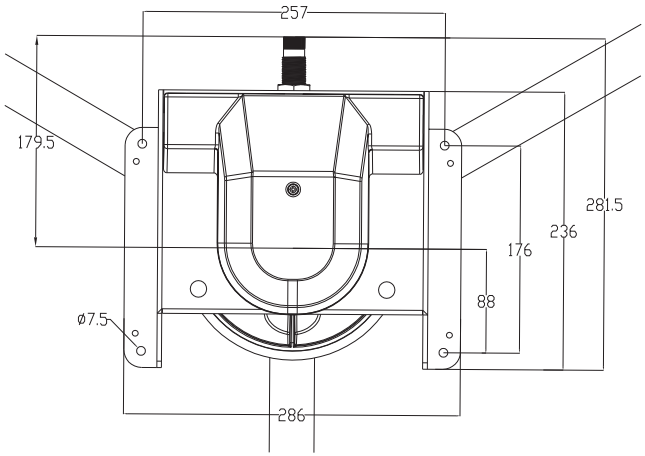

Top View

4.2 Turnstile Mechanism Structure

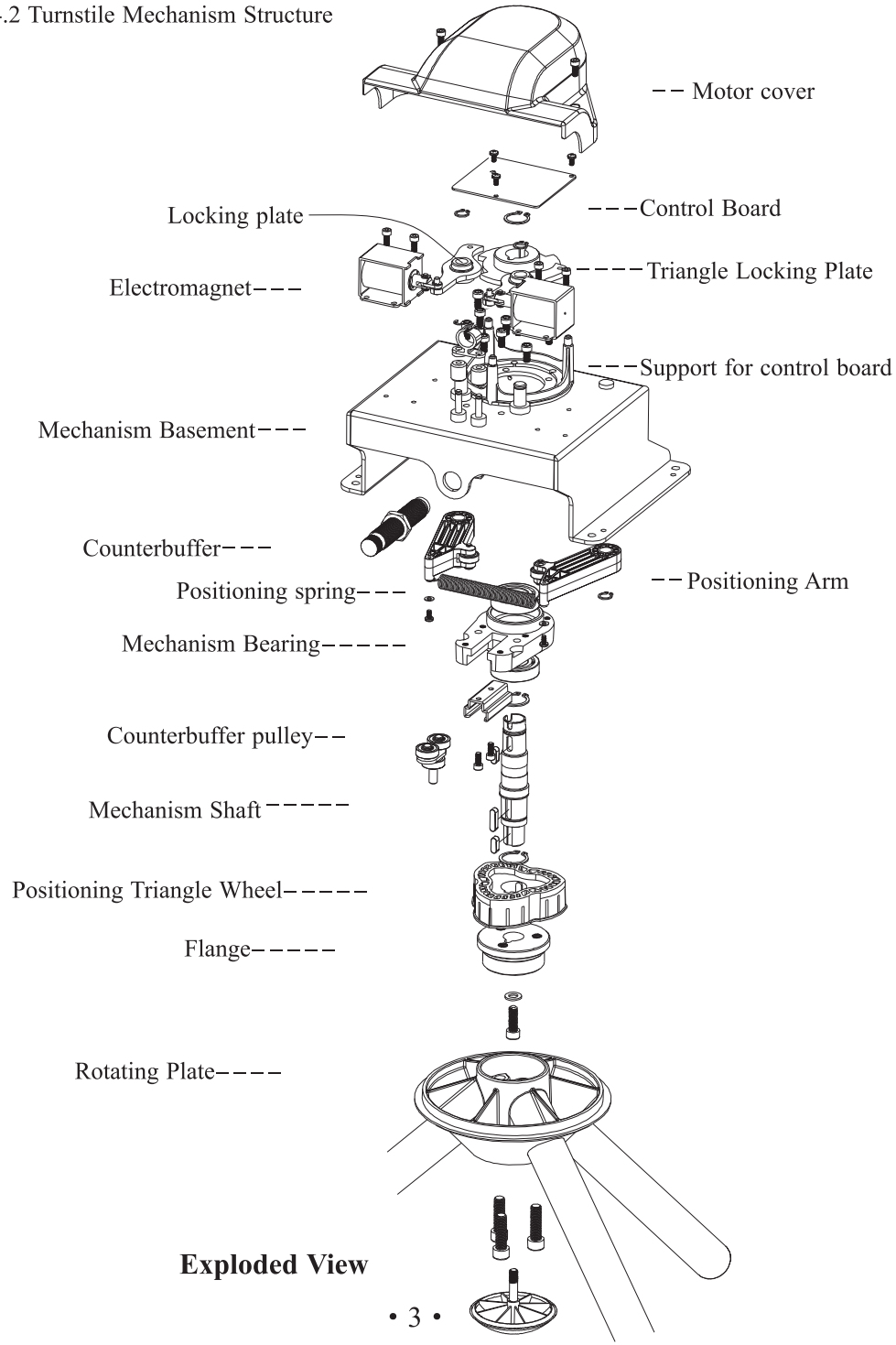

Exploded View

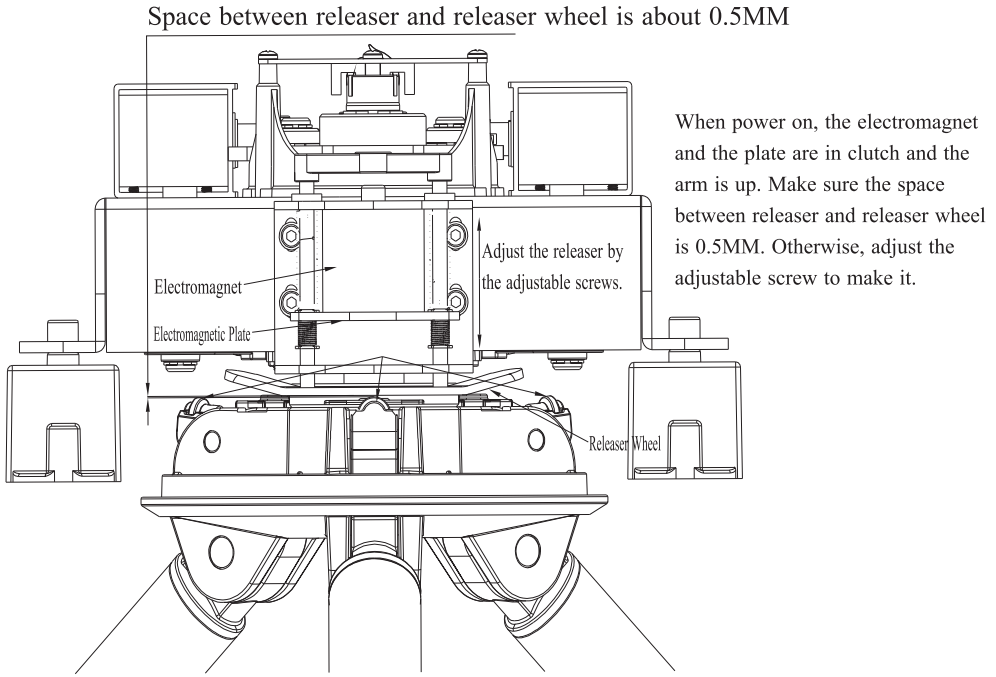

When power on, the electromagnet and the plate are in clutch and the arm is up. Make sure the space between releaser and releaser wheel is 0.5MM. Otherwise, adjust the adjustable screw to make it.

5. Mechanism Operation Principle

5.1 When power on, it is necessary to put the turnstile arm up by hand; there is no need to do this if there is no auto drop function.

5.2 When access signal activated, the electromagnet power off and the unlocking spring pushes away the locking plate from the triangle locking plate. The tripod arm is unlocked. While the arm turns 120 degree after passenger flow, limit switch on the control board sends a signal to the control board and then the electromagnet power on. At this time, the power will offer force to the unlocking spring to make the locking plate in clutch with the triangle locking plate. The tripod arm is dropped. At the same time, an access signal is sent to the counter output.

5.3 When the power off or emergency signal is activated, three electromagnets will be off power and the arm will drop automatically and the rotating plate can turn freely.

5.4 When authorized access signal is sent, the arm will lock within 5 seconds if there is no passenger access. If trying to reverse the arm in this condition, the magnet will be on power to avoid unauthorized access with alarm for 5 seconds.

6. Installation and Adjustment Explanation

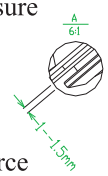

6.1 Put the mechanism in the turnstile cabinet and adjust the bolts to make sure a 1~1.5mm space between the rotating plate and the cabinet; turn the rotating plate for several turns and the space stays the same. And then fasten the installing bolts.

6.2 Counter buffer adjusting: turn the black button on counter buffer; the force will be stronger as the digit value increases. While the force is too little, the arm would not be firm and while the force is too strong, the arm will be running slowly. Normally, the counter buffer has been adjusted well before delivery. When adjusting the counter buffer, you need to use the small hex wrench to loosen the locking screws of the counter buffer tail, after adjusting the counter buffer well, then fasten the screws.

6.3 Can be integrated with access control system, attendance machine and card dispenser, etc：Connect the wiegand signal line of the card reader to the main board of access control product or attendance machine, at the same time, connect the output dry contact open signal to L and GND interfaces or R and GND interfaces of the tripod turnstile. And then you can open the door with the authorized card from the specific access control product or attendance machine.

6.4 Can be used for fire emergency：first of all, connect the EM signal (COM and NO) to GND and EM interface on main board of tripod turnstile. After that the tripod arms will drop off automatically or can be turned freely. At the same time, the ARARM interface(output DC12V) is also available for connecting the emergent passing signal or alarm light etc).

7. Electrical Diagram and Connection

7.1. Power input is DC+12V (Make sure to connect correctly)

7.2. Connect the cable of electromagnets of L and R in its corresponding pin, and link the arm-drop magnet with the EM pin.

7.3. Link the dry contact signal with L/R/EM/G; for example, when the L and G is linked, the L magnet will send a signal and the arm will turn left.

7.4. Counter output: L and R relays will send a pulse of 200MS, and Both L/R have separate relays—COM, NC, NO.

7.5. Emergency alarm: to connect the alarm device and the output voltage is 12V, 1A. If there is emergency signal input, the output voltage of the Alarm contact is DC10V

7.6. Electrical wiring diagram for tripod turnstile.

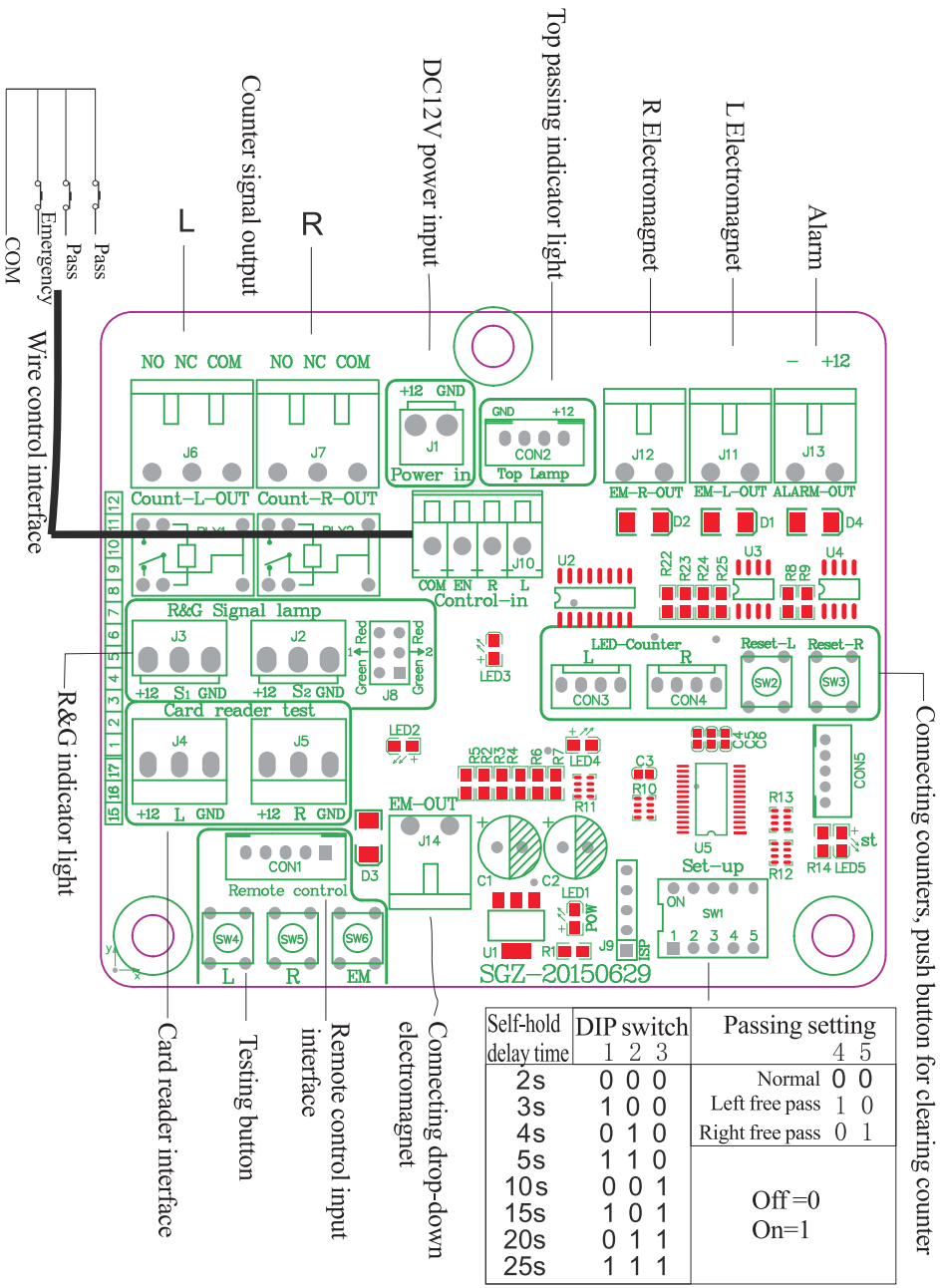

Self-hold delay time	DIP switch 1	2	3	Passing setting	4	5
2s	0	0	0	Normal	0	0
3s	1	0	0	Left free pass	1	0
4s	0	1	0	Right free pass	0	1
5s	1	1	0			
10s	0	0	1	Off =0		
15s	1	0	1	On=1		
20s	0	1	1			
25s	1	1	1			

Electrical wiring diagram for tripod turnstile

8. Warranty and Service

8.1 1 year warranty
8.2 Lifetime service with charge accordingly.
8.3 24 hours online service

Free warranty is not offered if the following circumstances happen.

1. The user does not install the product according to the manual, which causes the product damage.
2. Using the product in the conditions of unstable current, overload current or not in line with the national electricity standard
3. Misuse and improper installation, which causes the produce damage.
4. Product damage is caused by natural disaster.
5. Not in the warranty period.
6. Other services promised by distributors.

The manufacturer reserves the explanation rights to the manual and the warranty articles.

9. Packing List

Item No.	Name	Qty	Unit	Notes
1	Housing	1	Piece	Necessary
2	Tripod Arm	3	Piece	Necessary
3	Mechanism	1	Piece	Necessary
4	Control Board	1	Piece	Necessary
5	Power Supply and Cables	1	Kit	Necessary
6	Air Switch	1	Piece	Necessary
7	Card Reader and its Cable	2	Kit	Optional
8	Counter and its Cable	2	Kit	Optional
9	Top LED light and its Cable	1	Kit	Optional
10	Access Control System	1	Kit	Optional
11	Mounting Bolts	Unspecified	Piece	Necessary