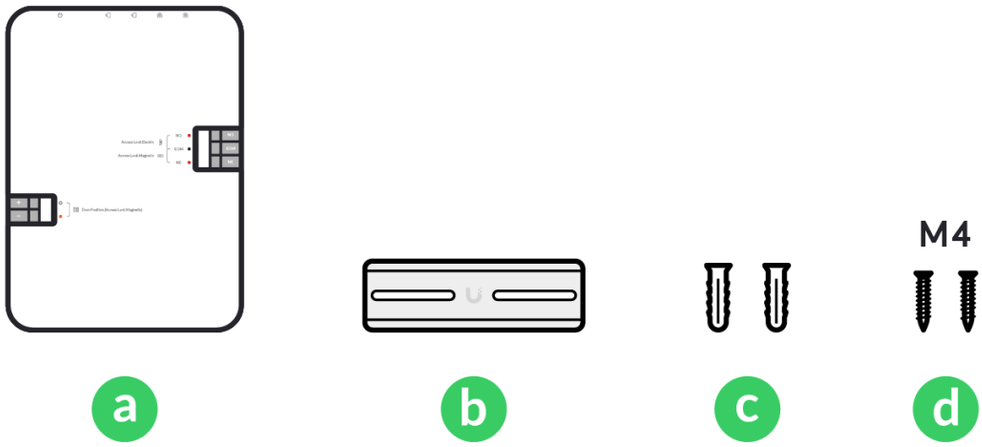

1

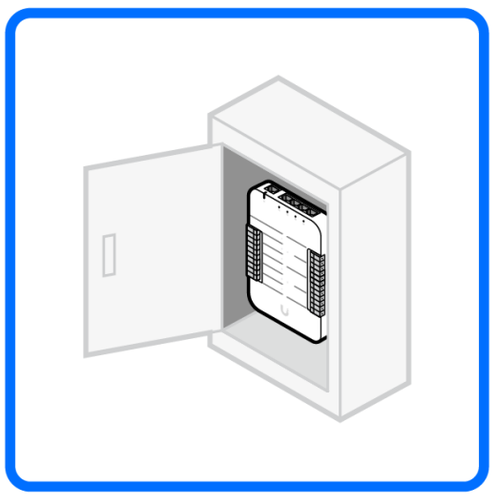

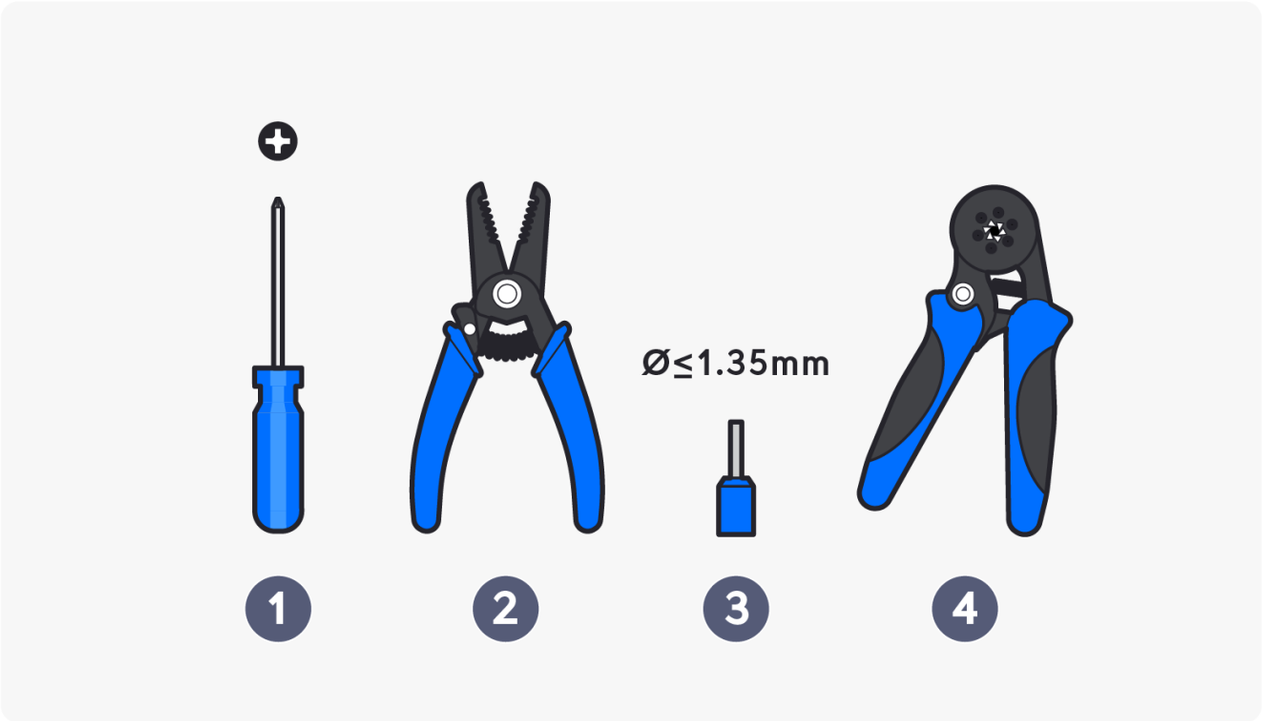
Ø≤1.35mm
1
2
3
4

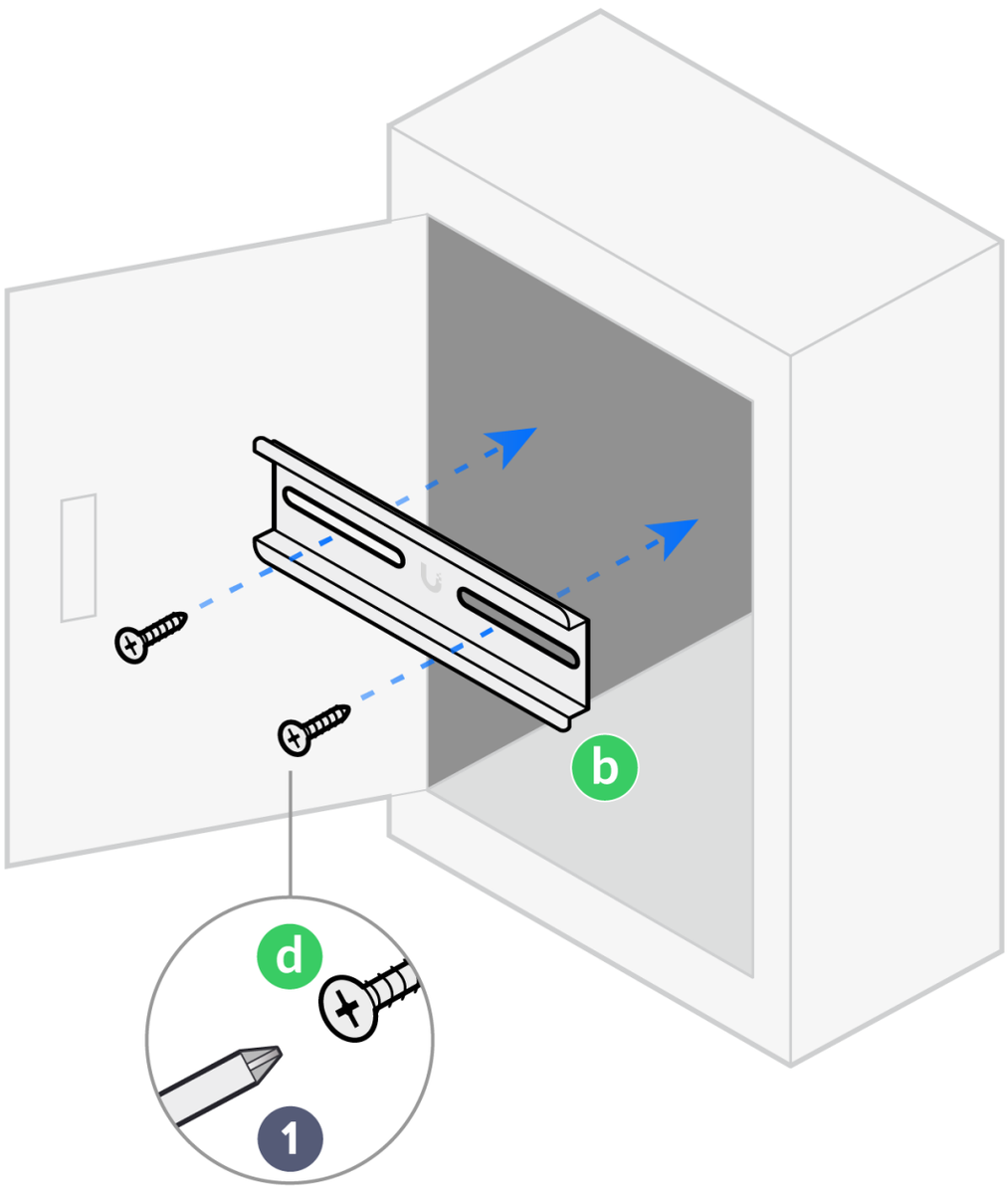
b
d
1

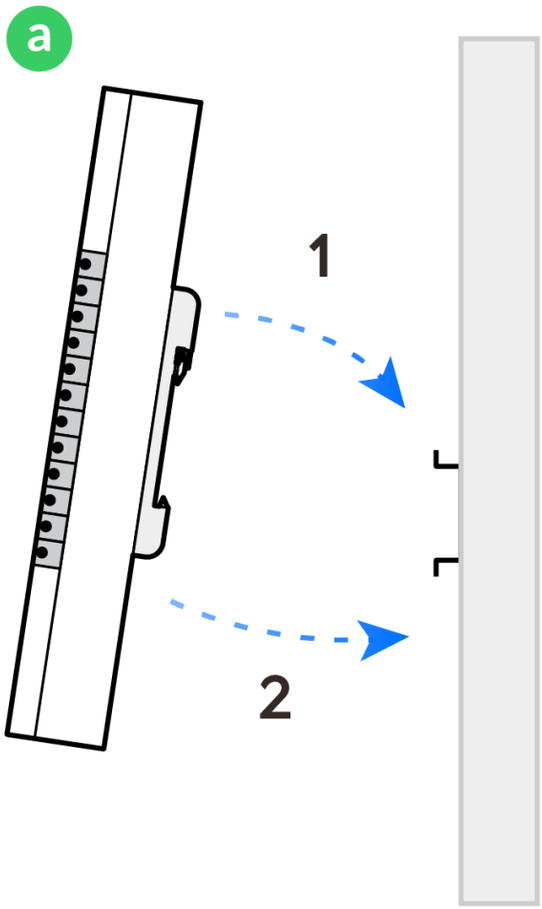
a
1
2

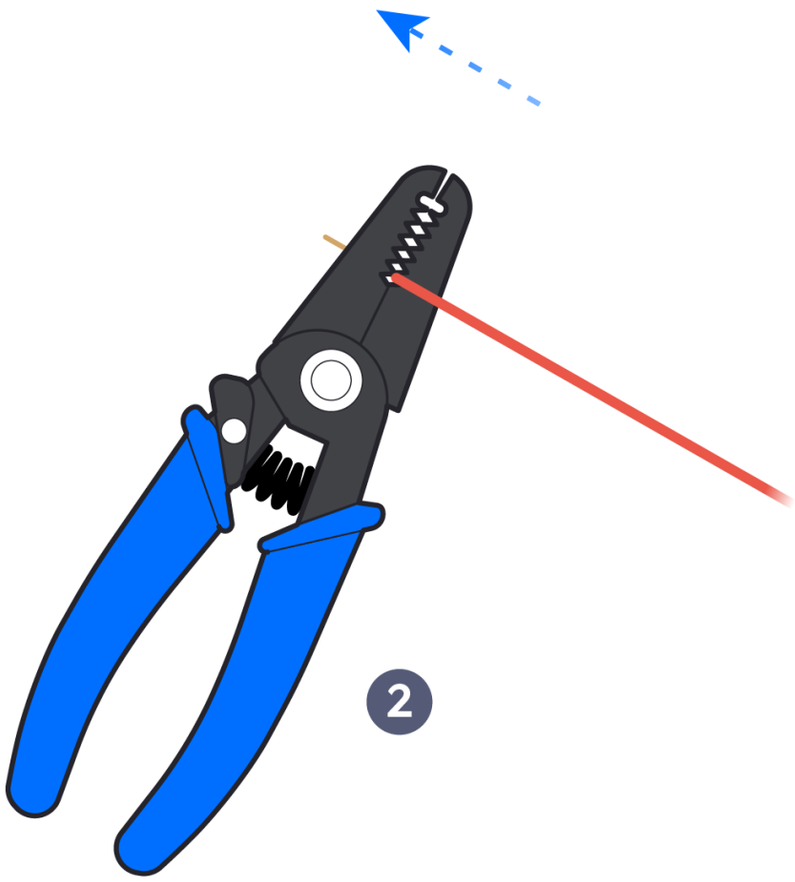
2

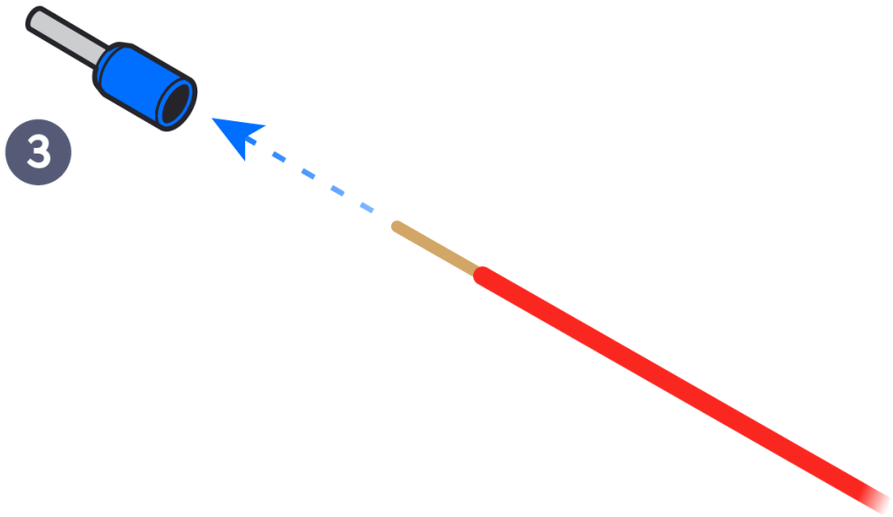
3

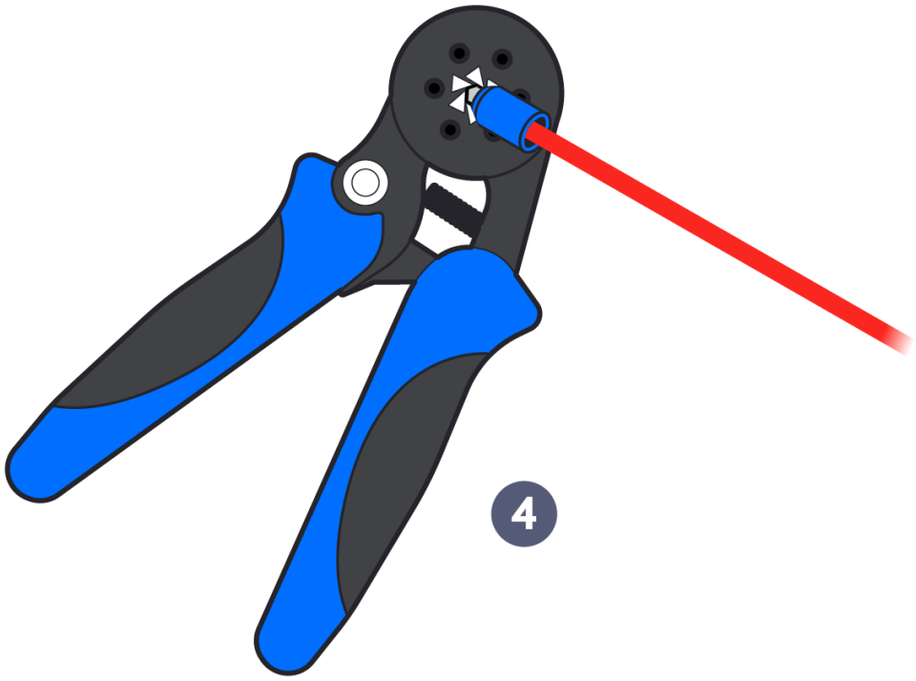
4

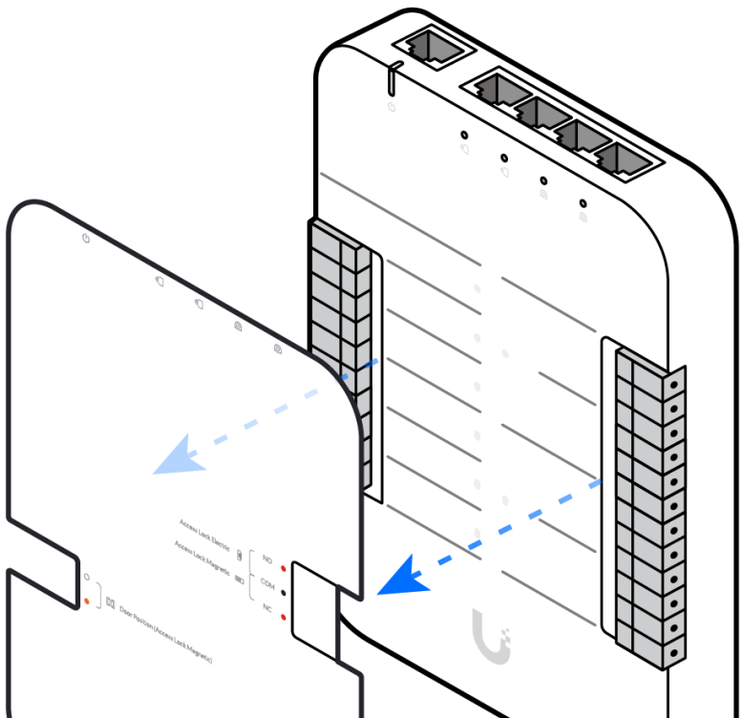
Access Lock Electric
Access Lock Magnetic
NO
COM
NC
Door Position (Access Lock Magnetic)

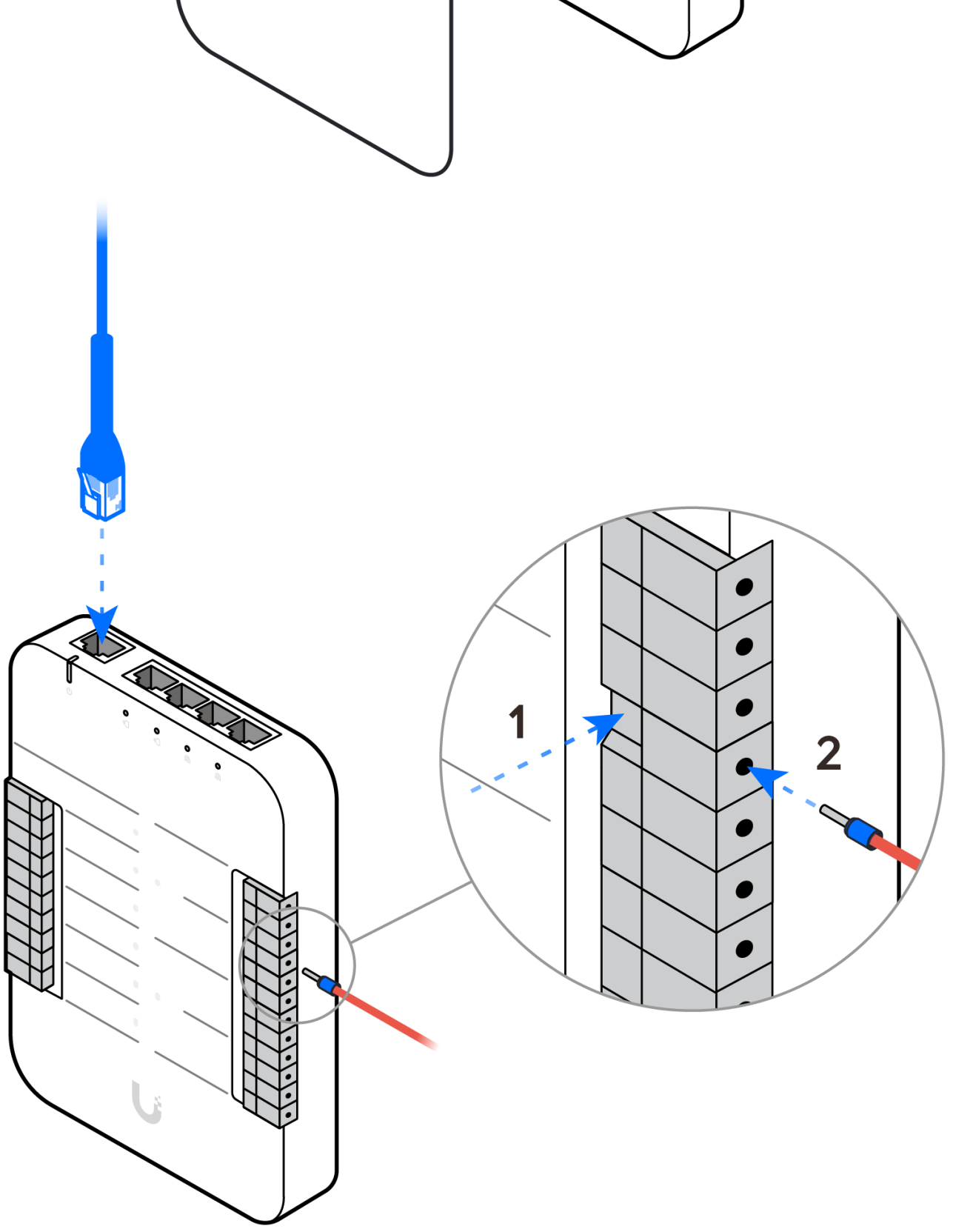
1
2

B

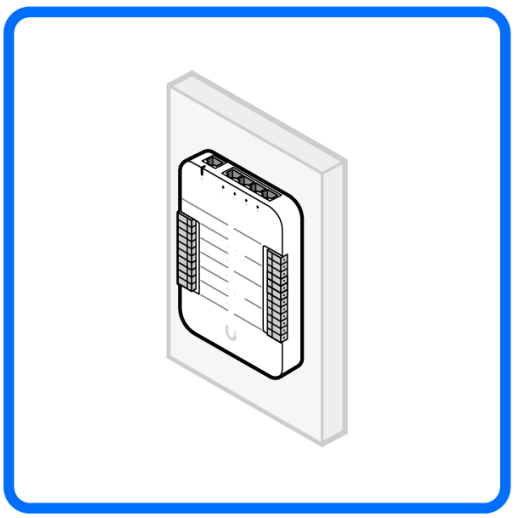

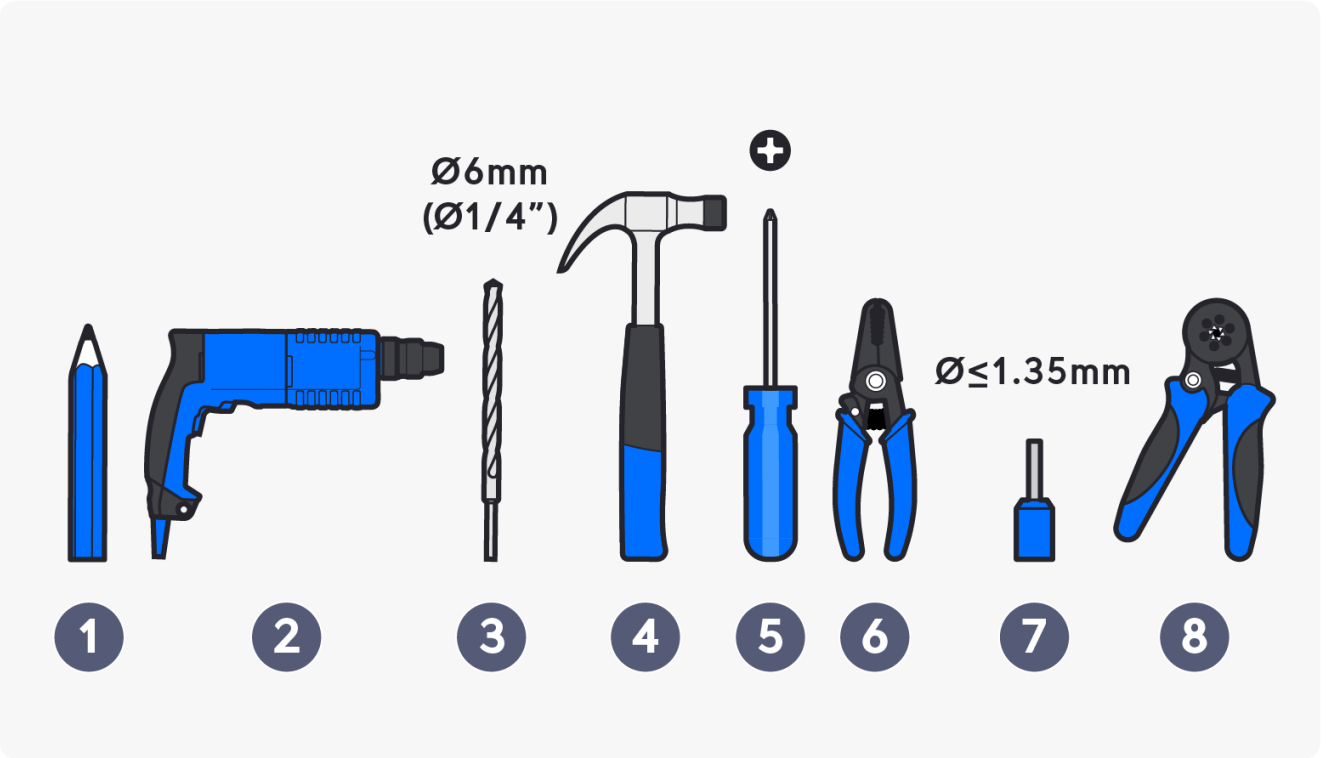

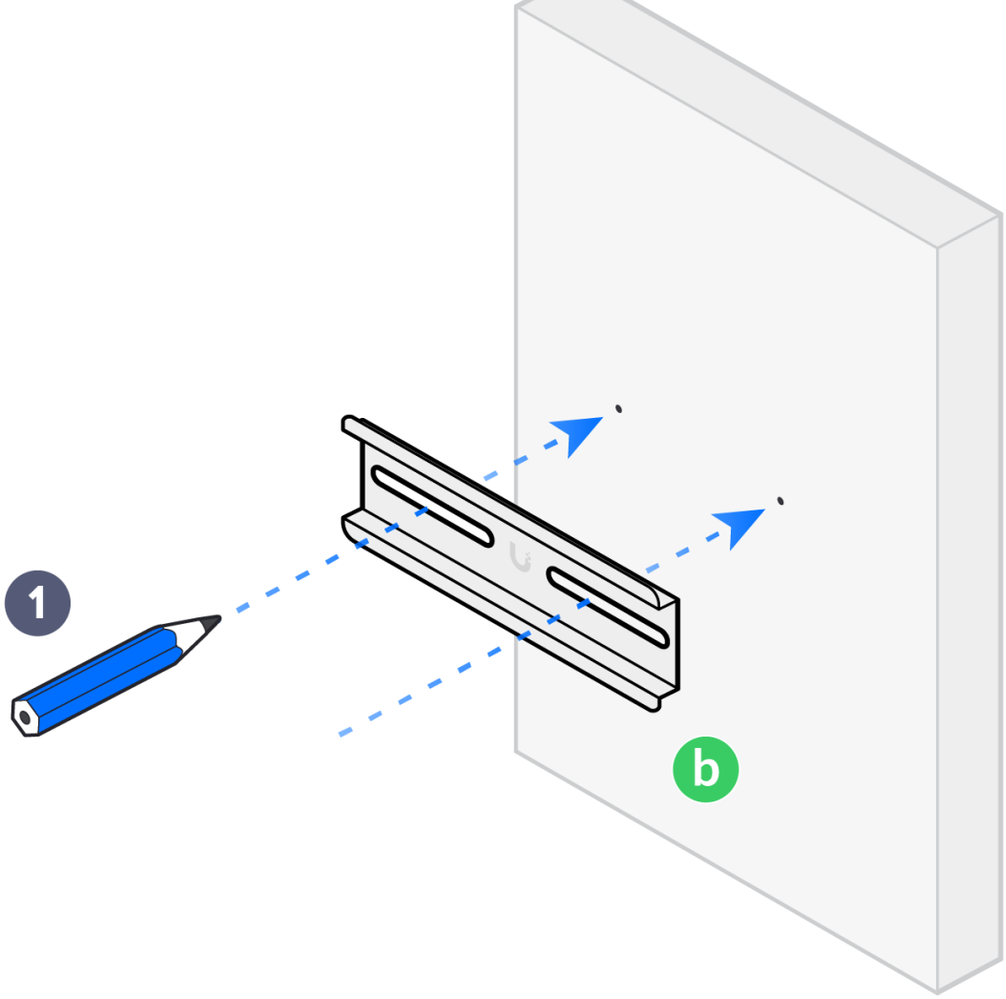
1
b

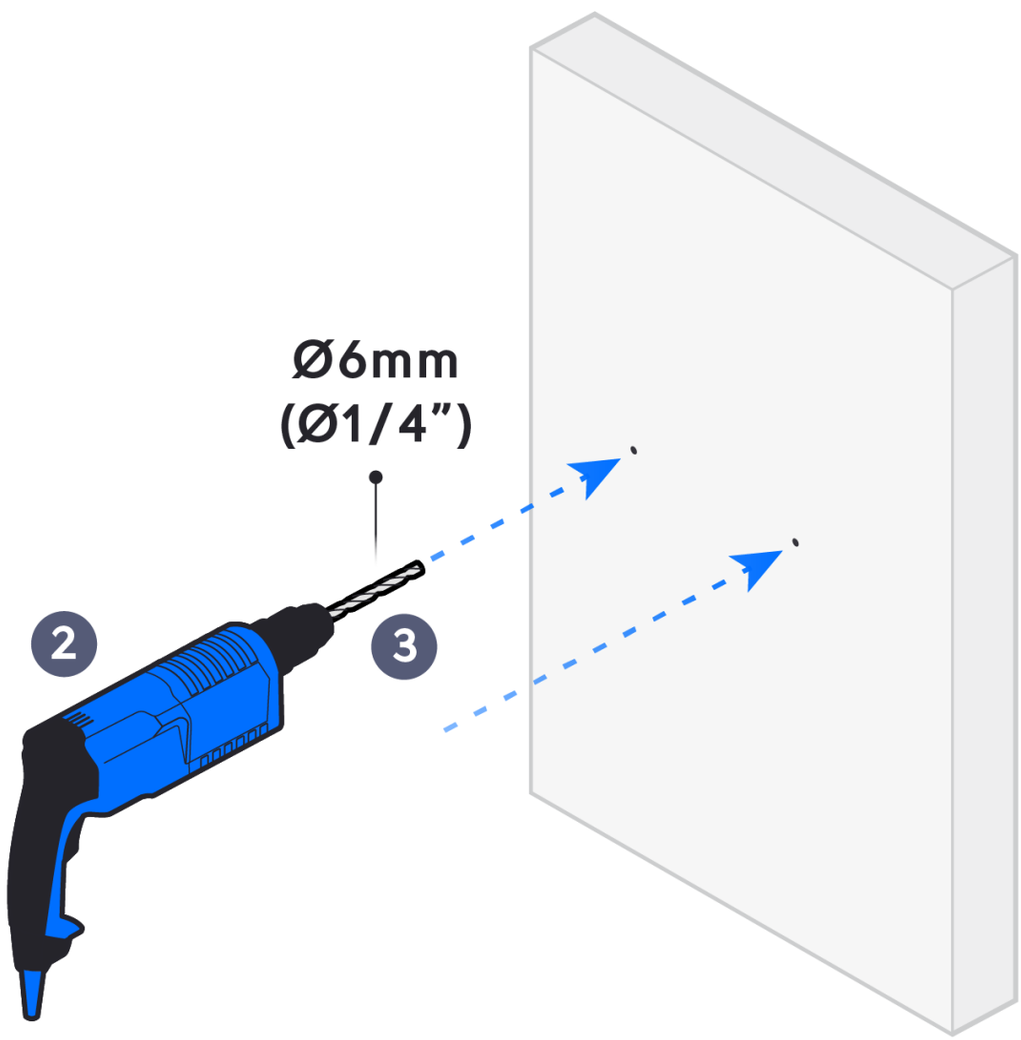
Ø6mm
(Ø1/4”)
2
3

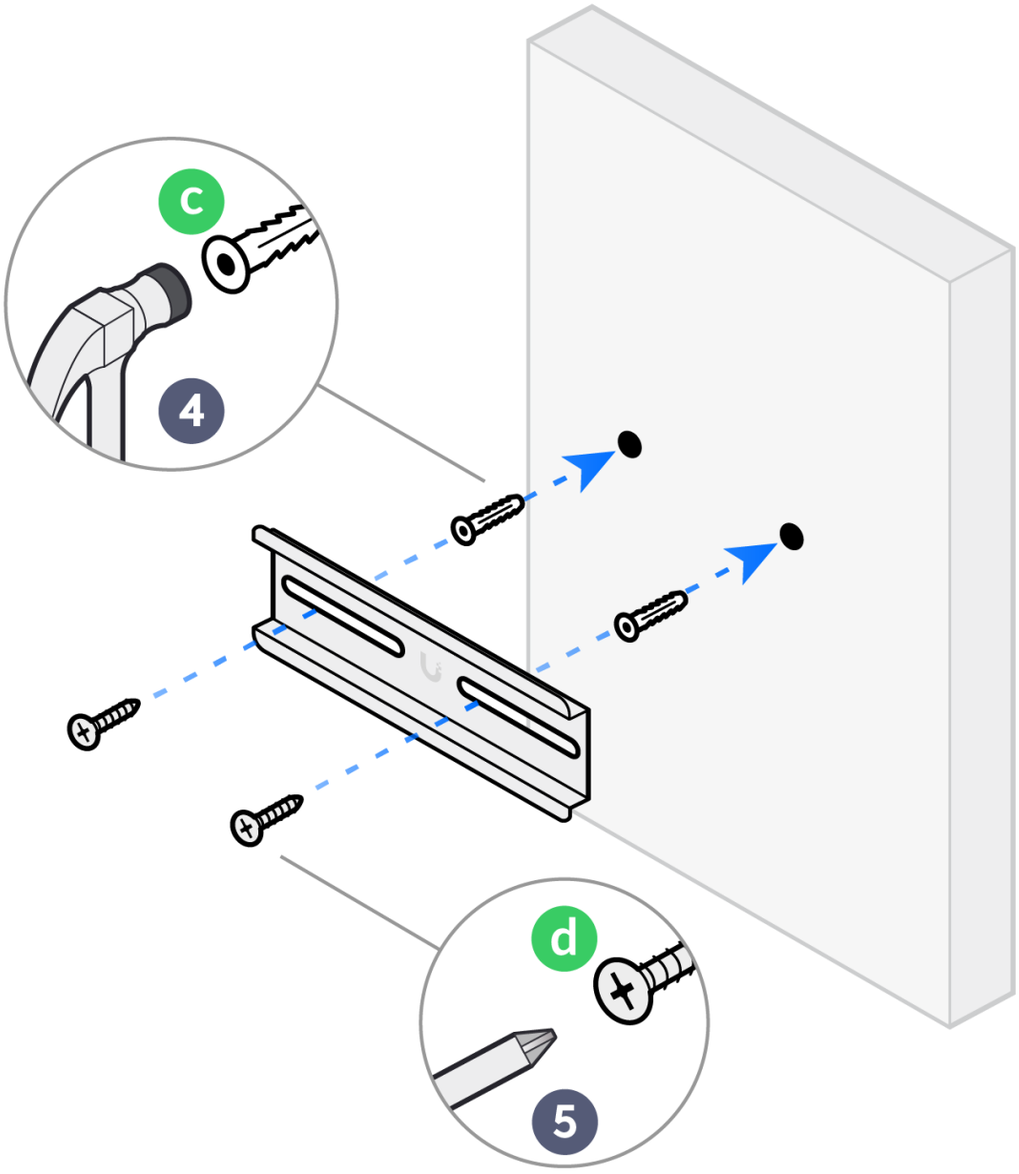
c
4
d
5

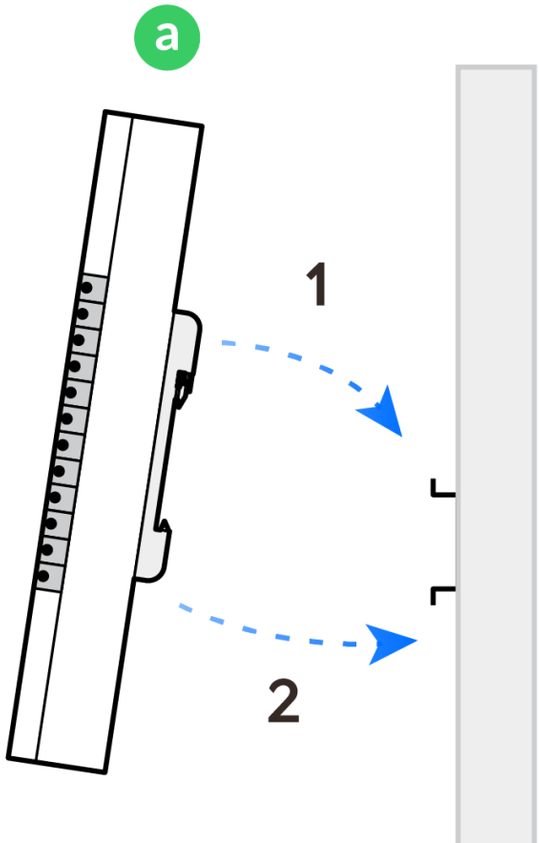
a
1
2

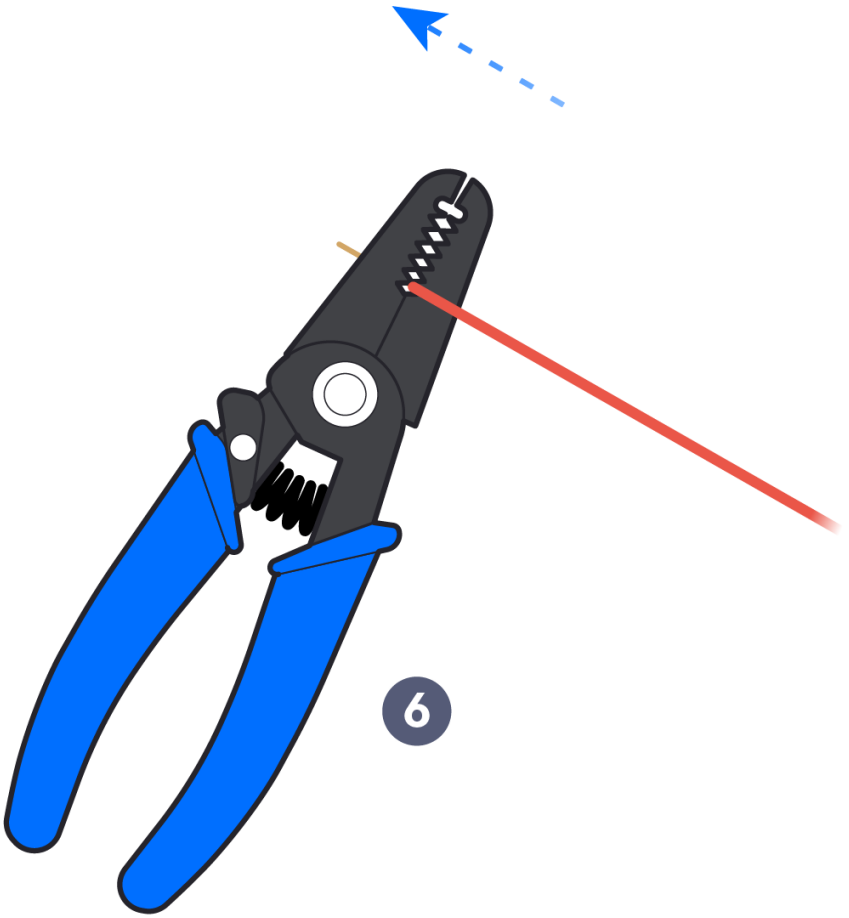
6

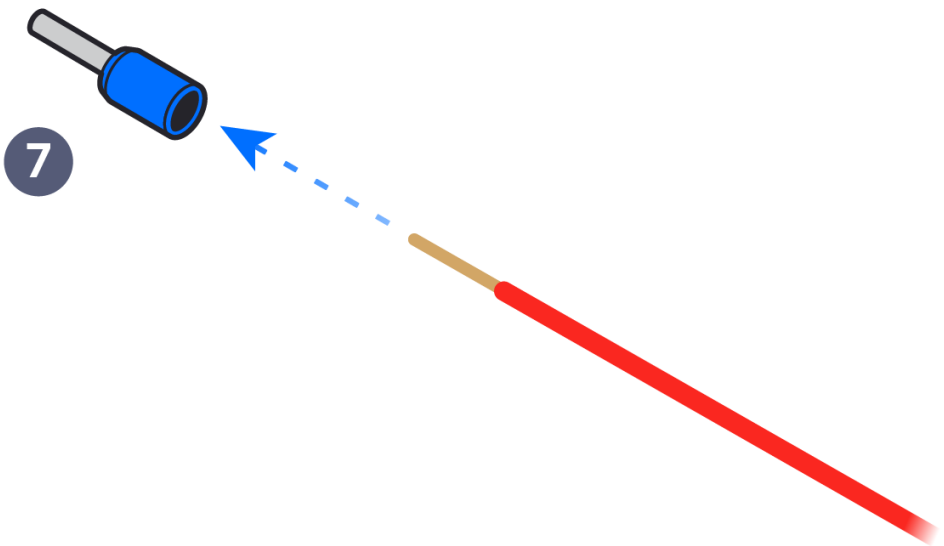
7

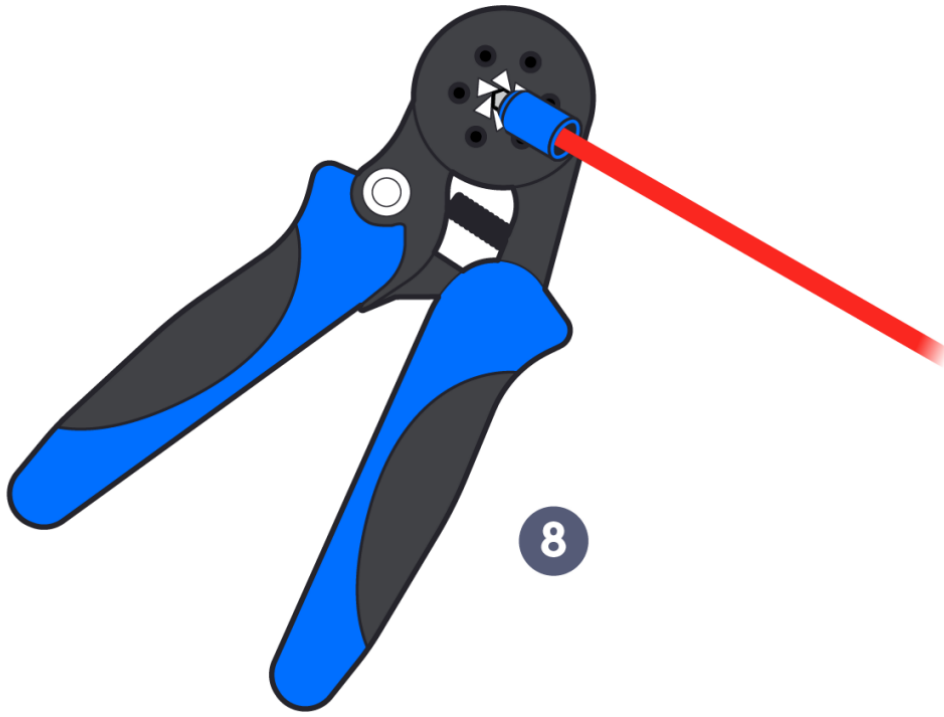
8

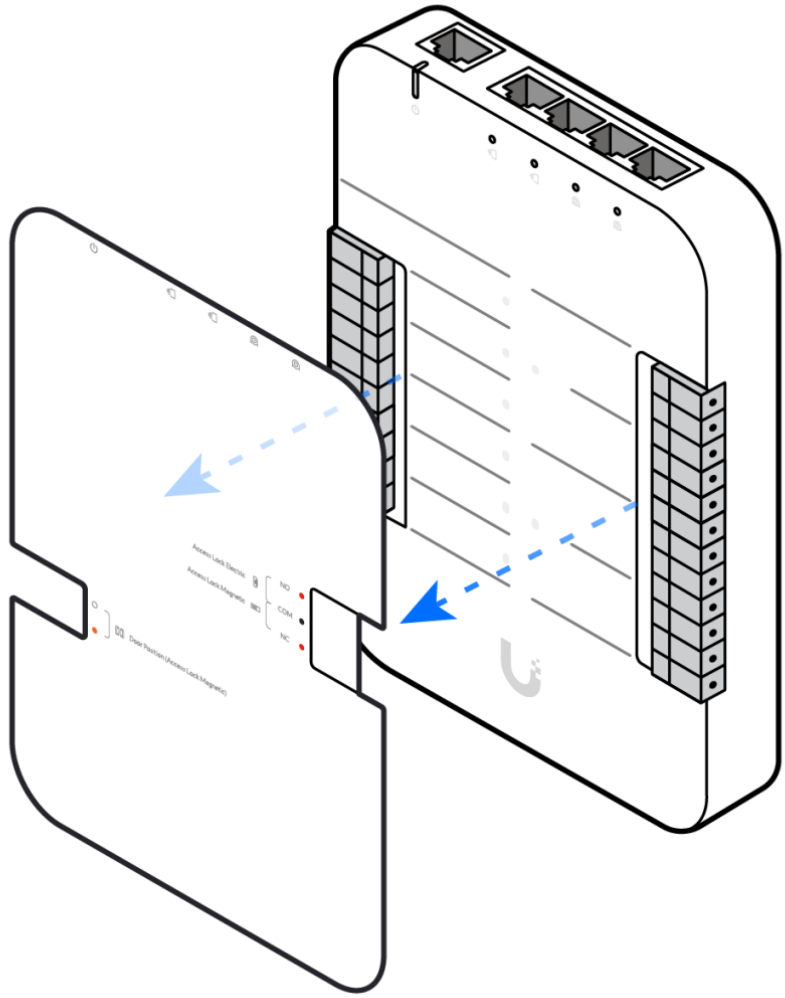

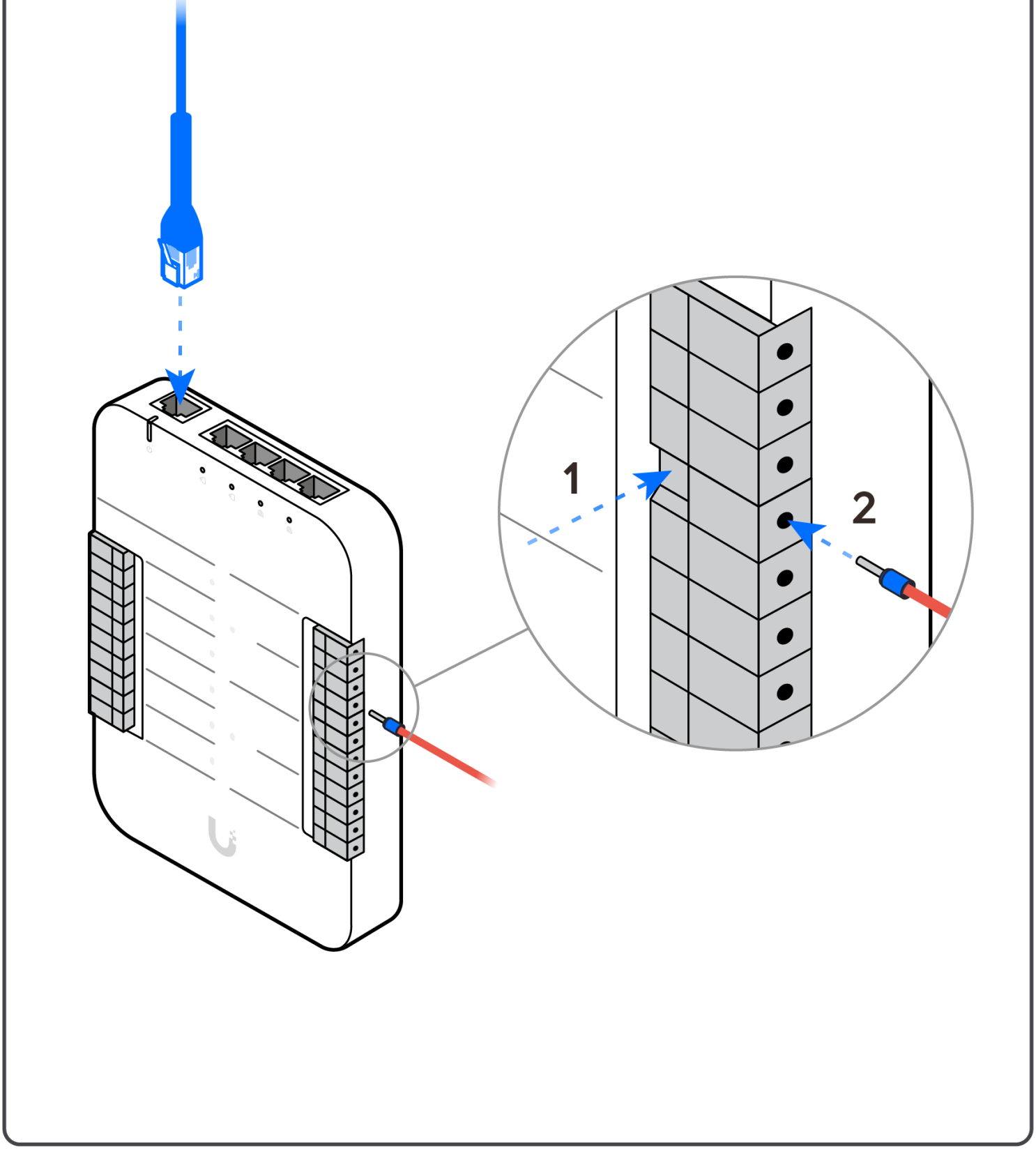

2

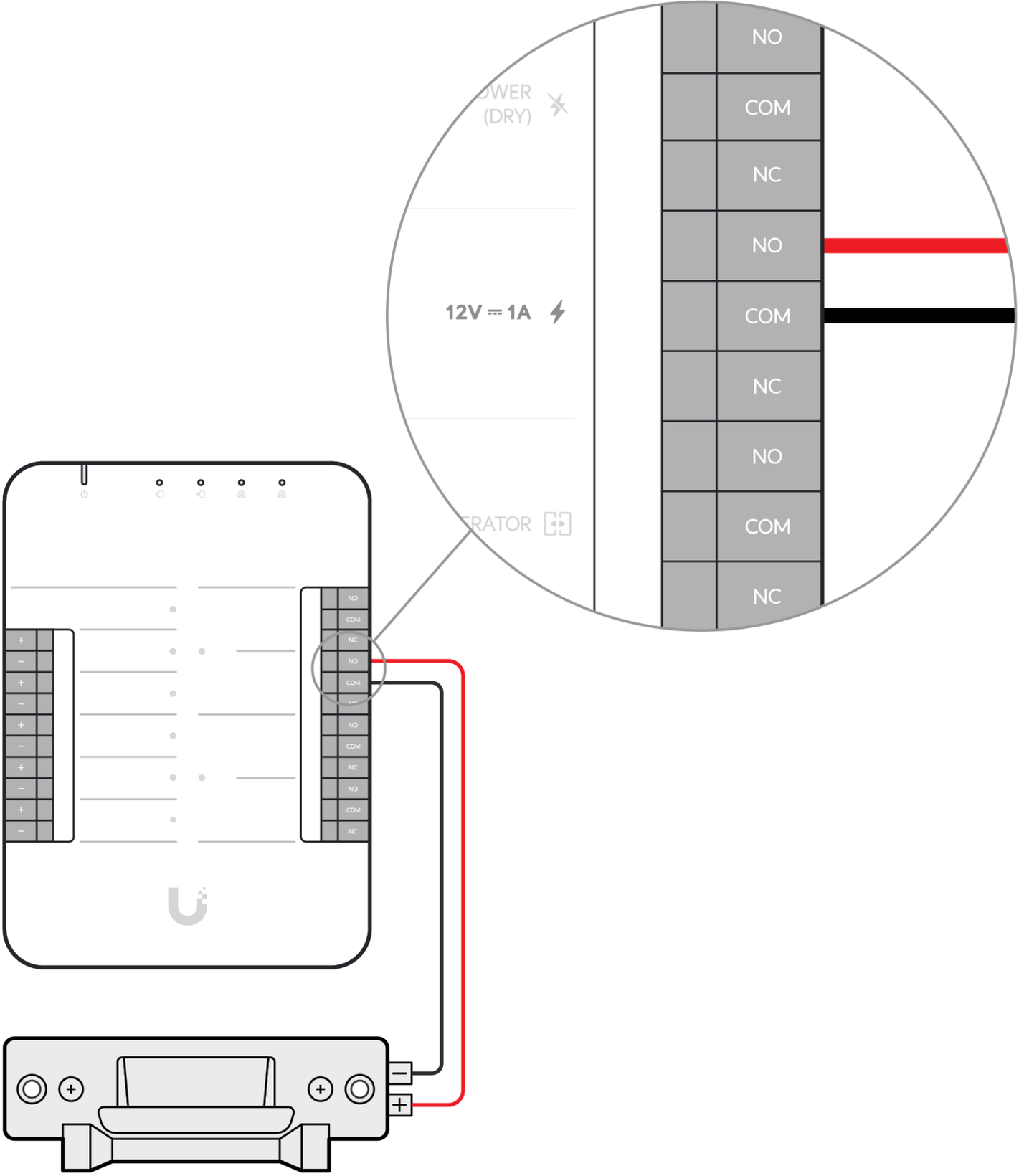

Fail-Secure Lock

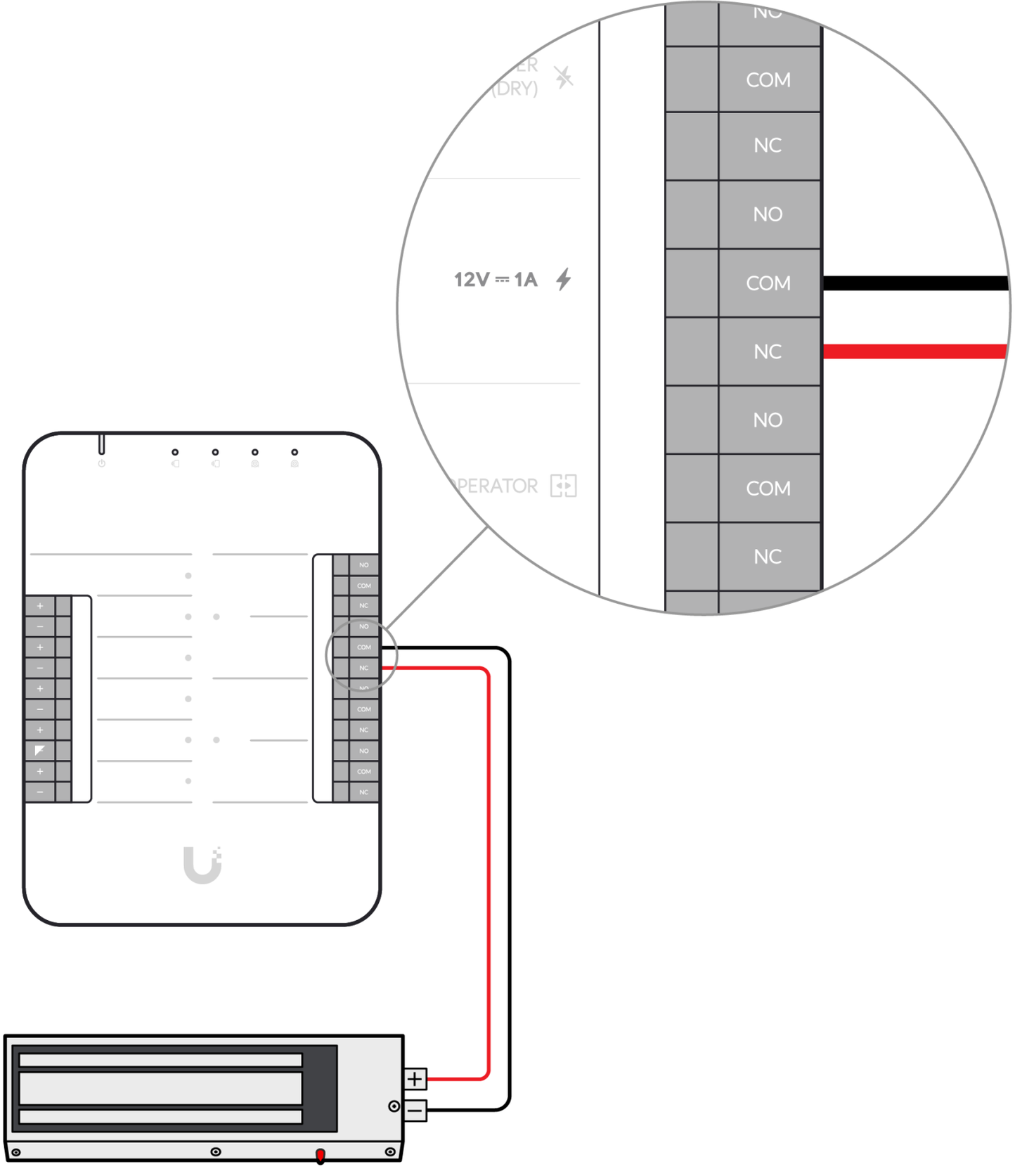

Fail-Safe Lock

Door Position Switch (Door Sensor)

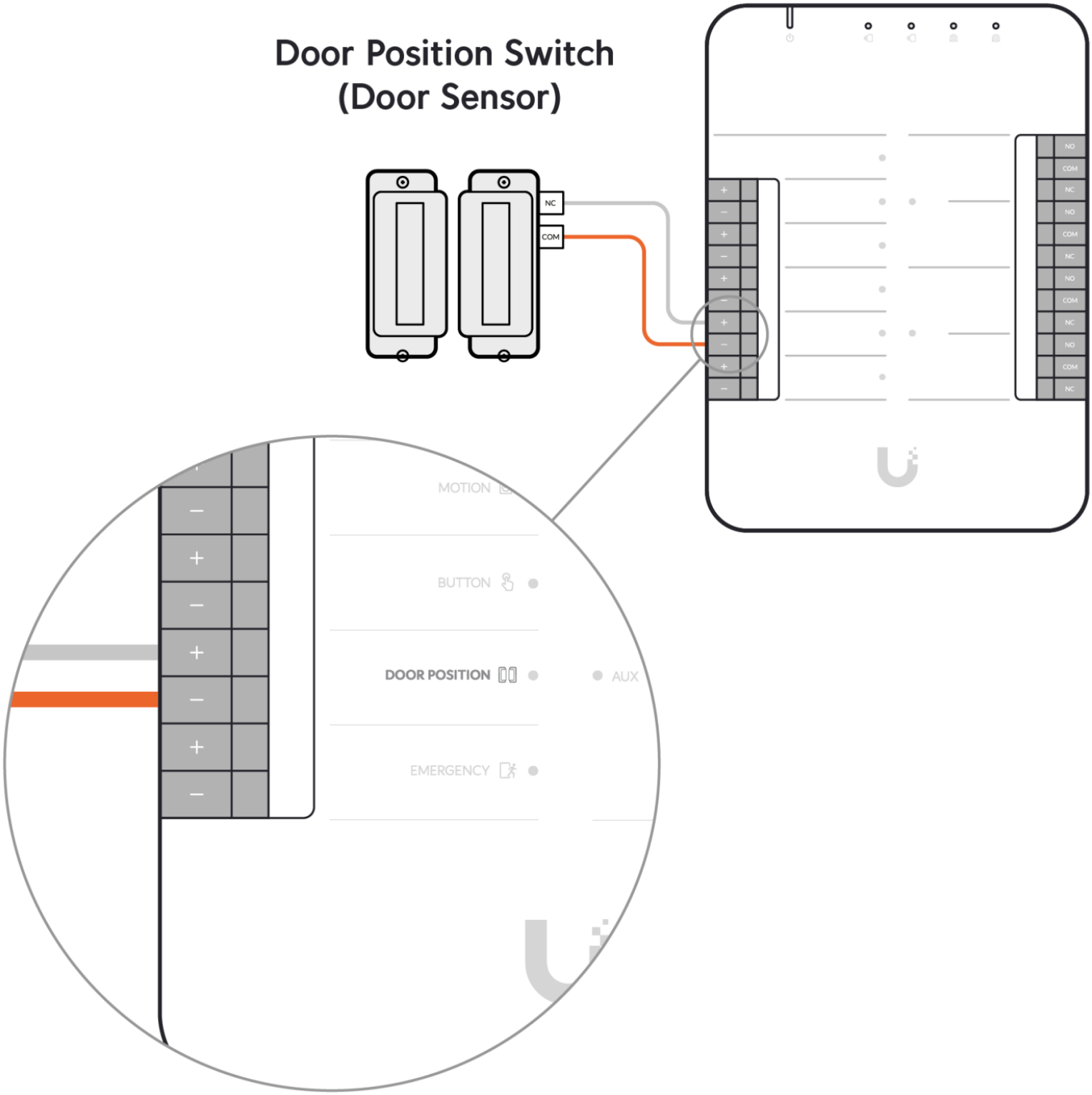

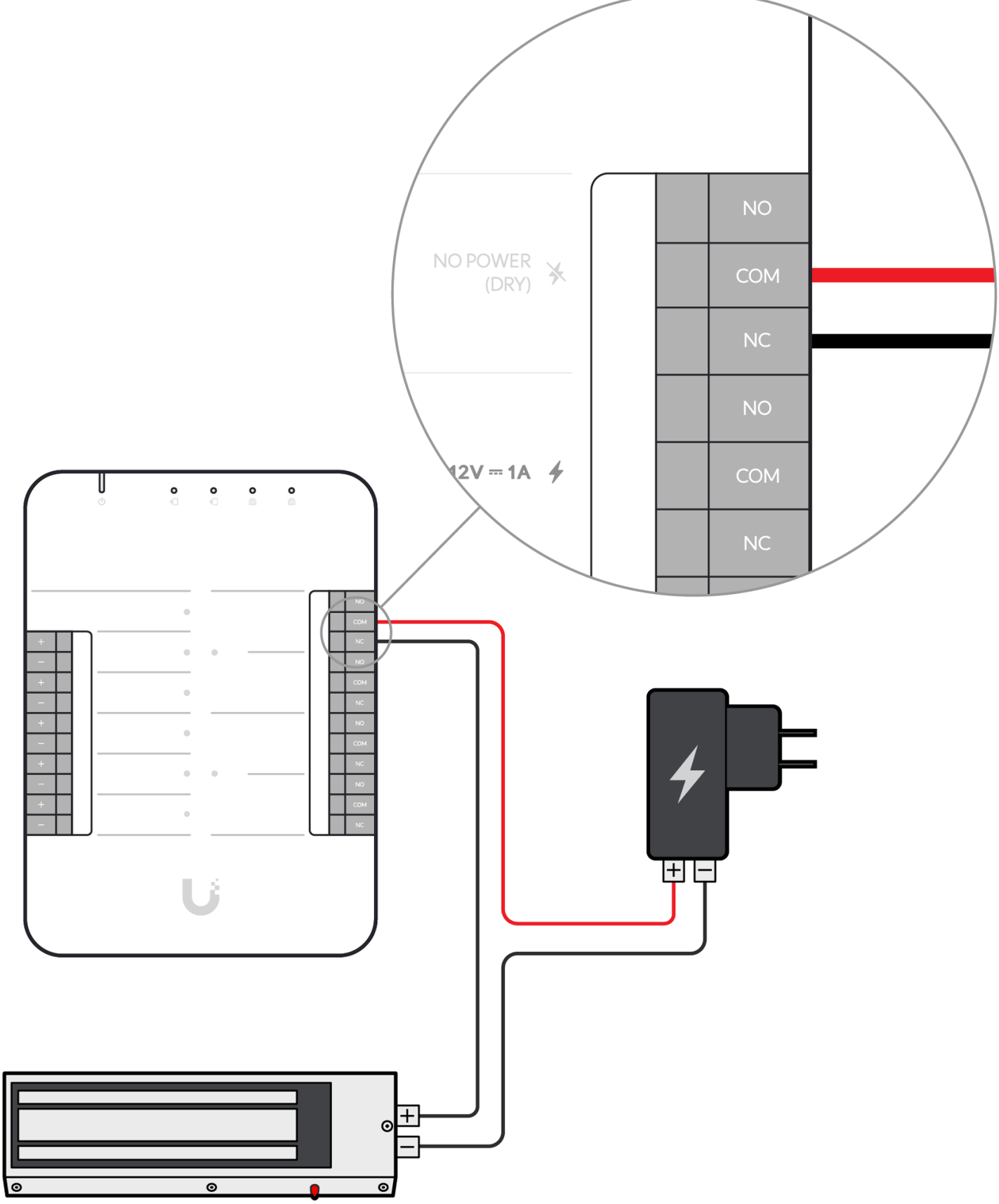

Fail-Safe Lock

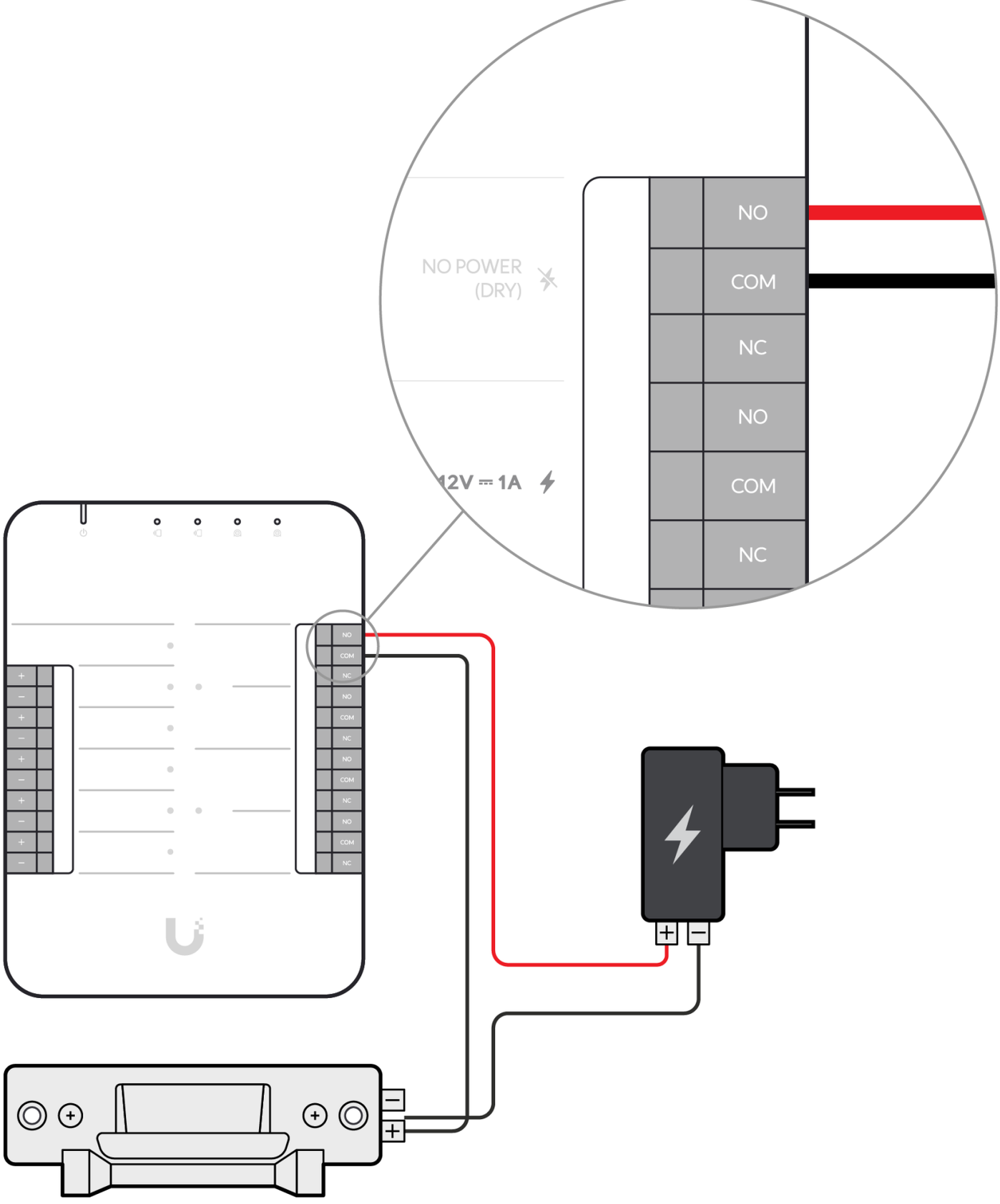

Fail-Secure Lock

Push Button

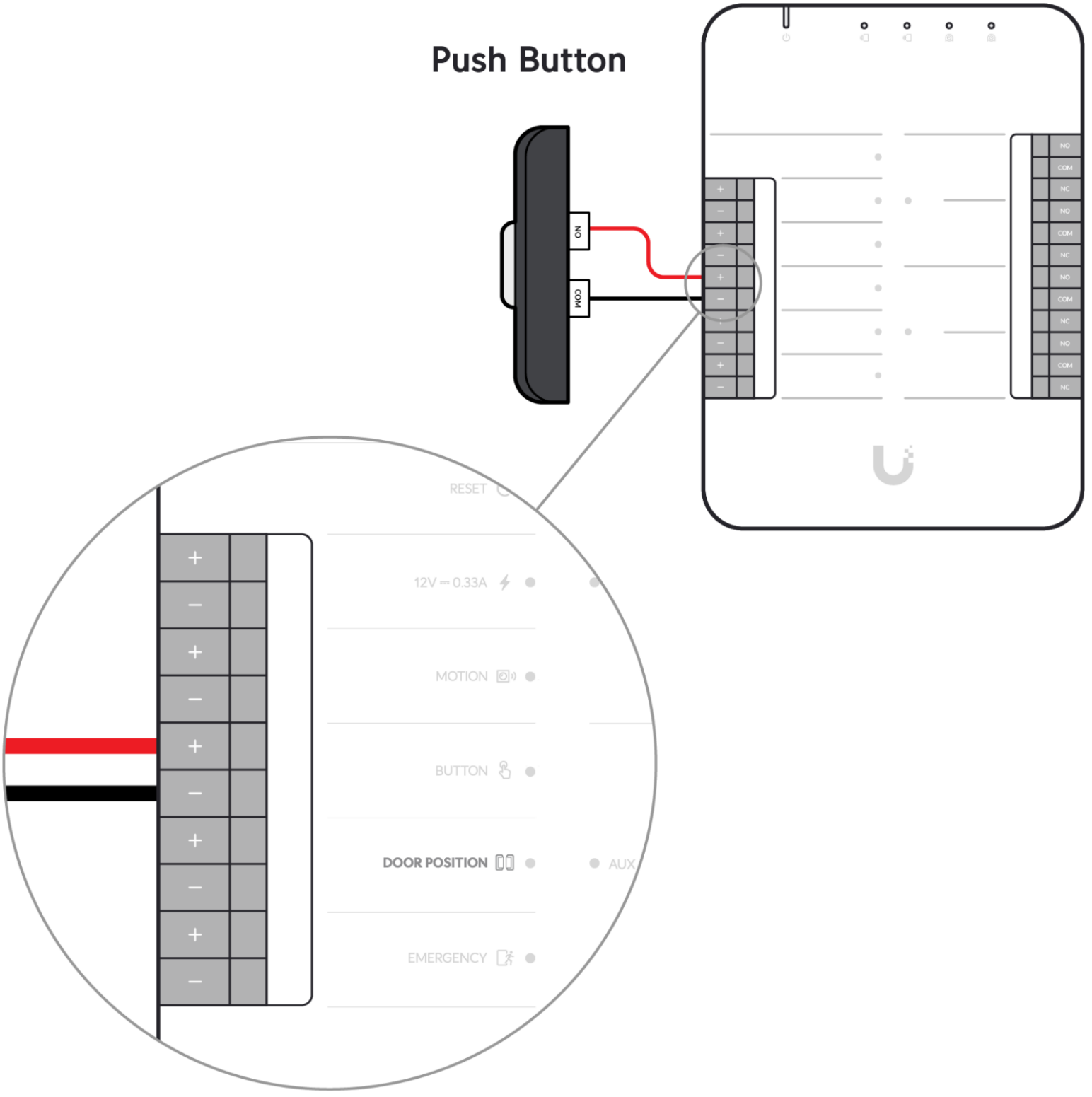
NO
COM
NO
COM
NC
NO
COM
NC
NO
COM
NC
NO
COM
NC
RESET
12V ⎓ 0.33A
MOTION
BUTTON
DOOR POSITION
AUX
EMERGENCY

Fire Panel

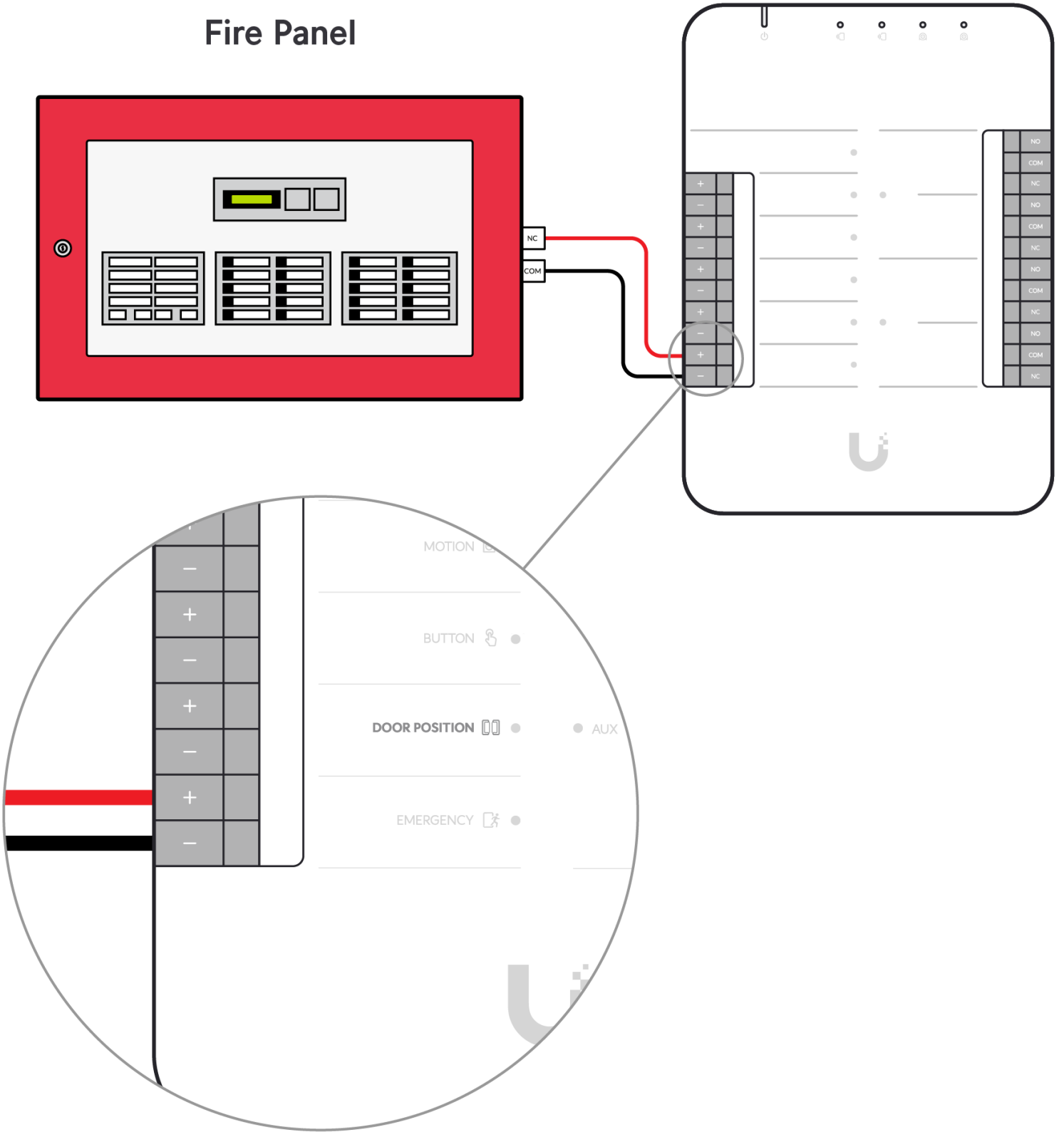

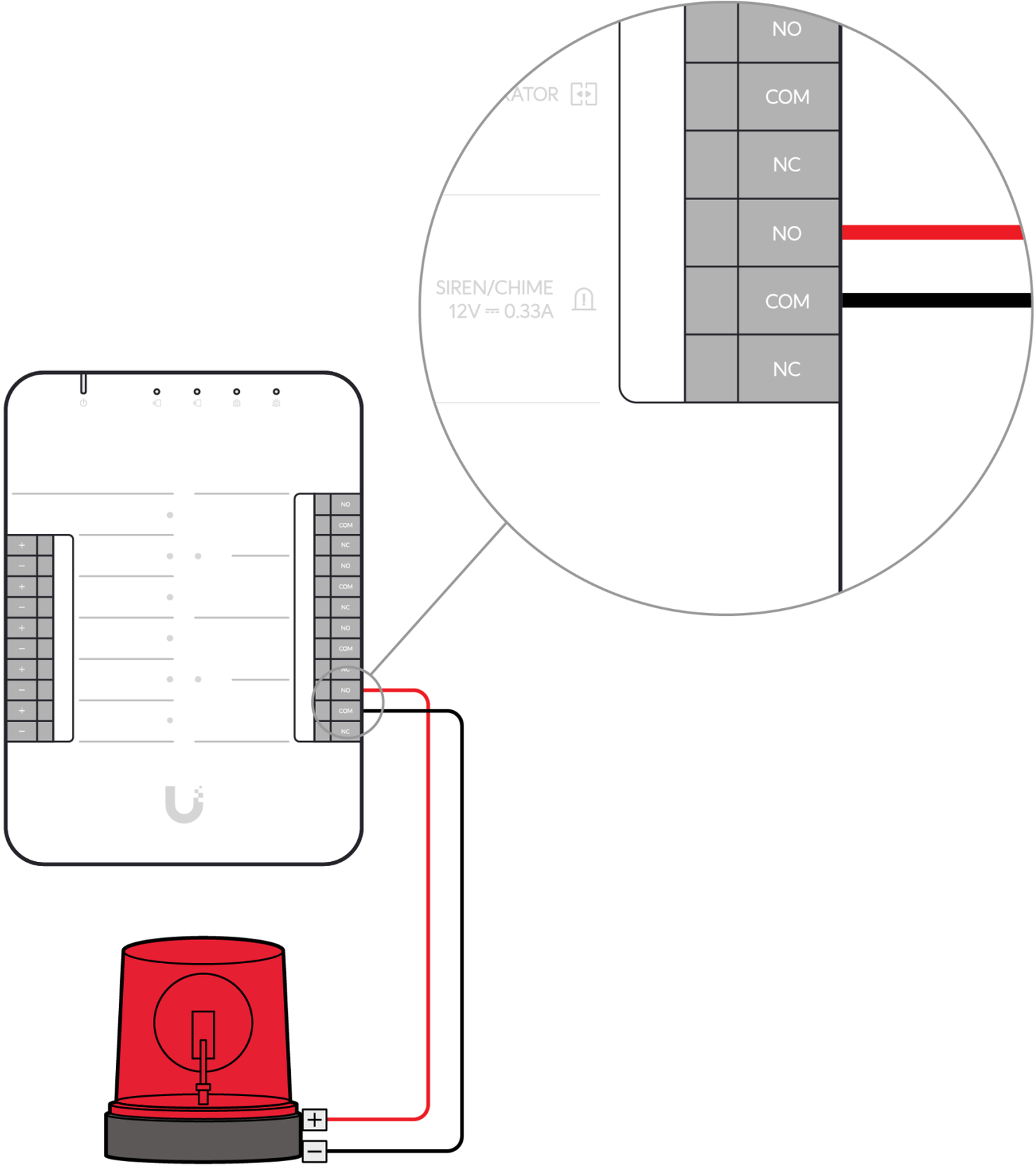
NO
COM
NC
NO
COM
NC
SIREN/CHIME
12V ⎓ 0.33A
Siren

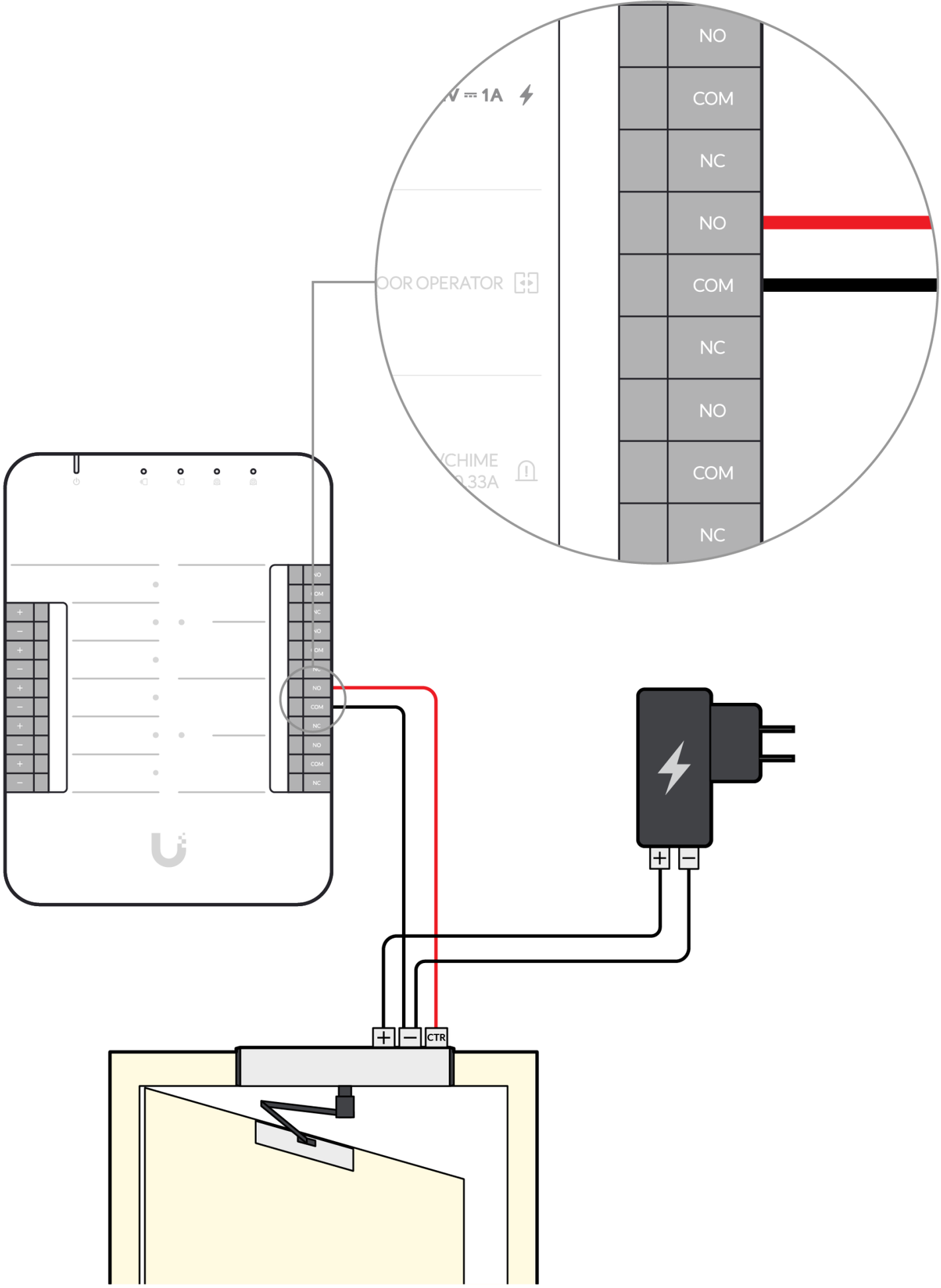

Door Operator

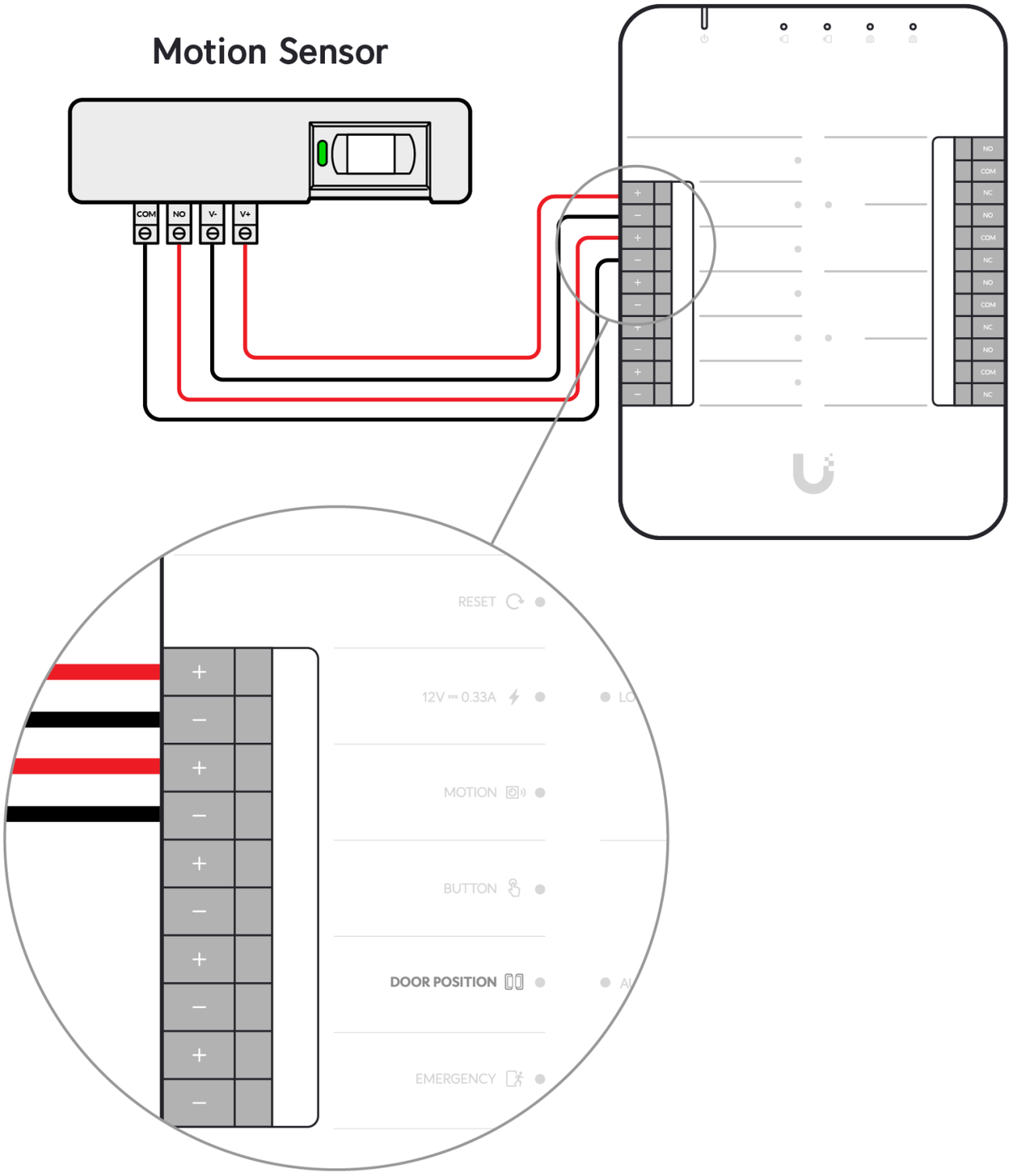
Motion Sensor
COM
NO
V-
V+
NO
COM
NC
RESET
12V 0.33A
MOTION
BUTTON
DOOR POSITION
EMERGENCY

3

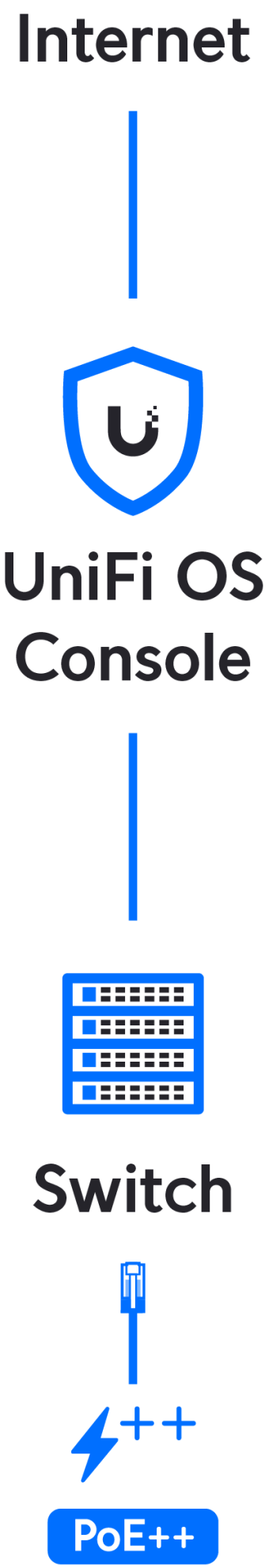
Internet
UniFi OS
Console
Switch
++
PoE++

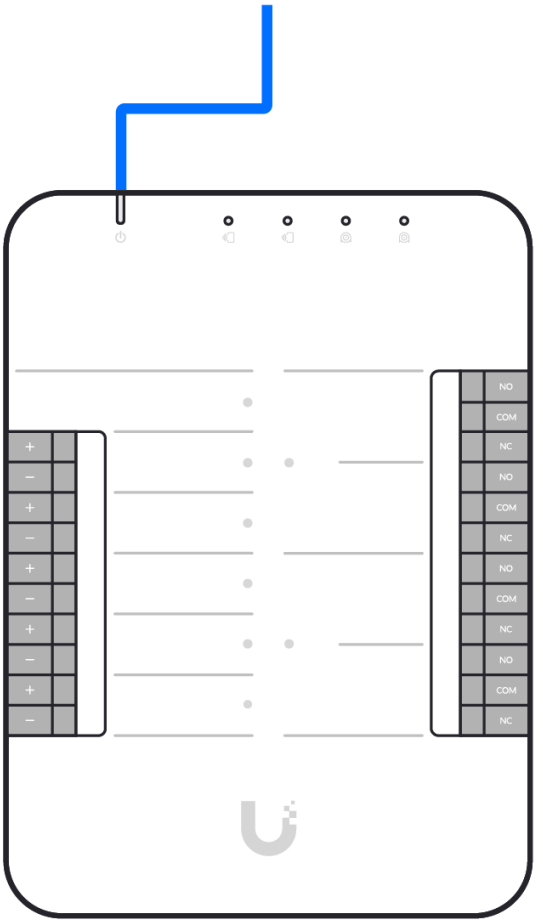

4

Download on the App Store

GET IT ON Google Play

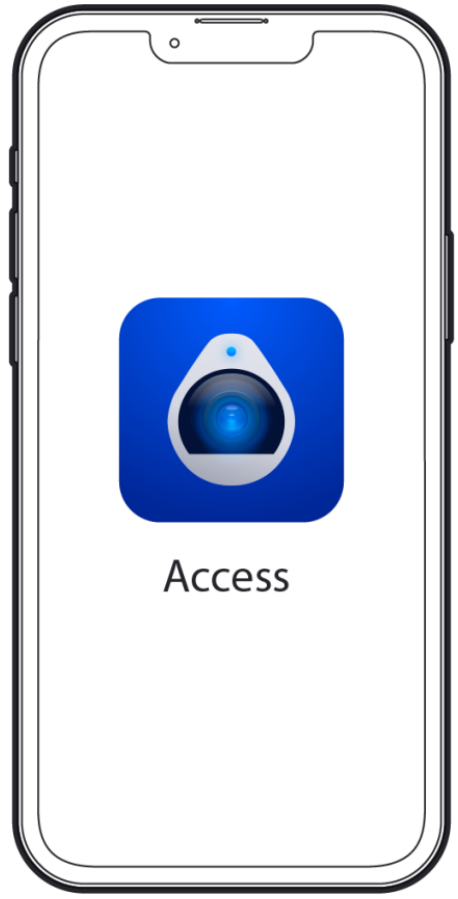

Get Answers
help.ui.com

UI Support

©2019-2021 Ubiquiti Inc. All rights reserved. Ubiquiti, Ubiquiti Networks, the Ubiquiti U logo, UniFi Access, and UniFi are trademarks or registered trademarks of Ubiquiti Inc. in the United States and in other countries. All other trademarks are the property of their respective owners.