User Manual

TS2200 Pro Series Tripod Turnstile

Applicable Model(s): TS2200 Pro, TS2211 Pro, TS2222 Pro

Date: July 2023

Doc Version: 1.0

English

Thank you for choosing our product. Please read the instructions carefully before operation. Follow these instructions to ensure that the product is functioning properly. The images shown in this manual are for illustrative purposes only.



For further details, please visit our Company's website www.zkteco.com.

Copyright © 2023 ZKTECO CO., LTD. All rights reserved.

Without the prior written consent of ZKTeco, no portion of this manual can be copied or forwarded in any way or form. All parts of this manual belong to ZKTeco and its subsidiaries (hereinafter the "Company" or "ZKTeco").

Trademark

ZKTeco is a registered trademark of ZKTeco. Other trademarks involved in this manual are owned by their respective owners.

Disclaimer

This manual contains information on the operation and maintenance of the ZKTeco equipment. The copyright in all the documents, drawings, etc. in relation to the ZKTeco supplied equipment vests in and is the property of ZKTeco. The contents hereof should not be used or shared by the receiver with any third party without express written permission of ZKTeco.

The contents of this manual must be read as a whole before starting the operation and maintenance of the supplied equipment. If any of the content(s) of the manual seems unclear or incomplete, please contact ZKTeco before starting the operation and maintenance of the said equipment.

It is an essential pre-requisite for the satisfactory operation and maintenance that the operating and maintenance personnel are fully familiar with the design and that the said personnel have received thorough training in operating and maintaining the machine/unit/equipment. It is further essential for the safe operation of the machine/unit/equipment that personnel has read, understood and followed the safety instructions contained in the manual.

In case of any conflict between terms and conditions of this manual and the contract specifications, drawings, instruction sheets or any other contract-related documents, the contract conditions/documents shall prevail. The contract specific conditions/documents shall apply in priority.

ZKTeco offers no warranty, guarantee or representation regarding the completeness of any information contained in this manual or any of the amendments made thereto. ZKTeco does not extend the warranty of any kind, including, without limitation, any warranty of design, merchantability or fitness for a particular purpose.

ZKTeco does not assume responsibility for any errors or omissions in the information or documents which are referenced by or linked to this manual. The entire risk as to the results and performance obtained from using the information is assumed by the user.

ZKTeco in no event shall be liable to the user or any third party for any incidental, consequential, indirect, special, or exemplary damages, including, without limitation, loss of business, loss of profits, business interruption, loss of business information or any pecuniary loss, arising out of, in connection with, or

 Copyright © 2023 ZKTECO CO., LTD. All Rights Reserved.

relating to the use of the information contained in or referenced by this manual, even if ZKTeco has been advised of the possibility of such damages.

This manual and the information contained therein may include technical, other inaccuracies or typographical errors. ZKTeco periodically changes the information herein which will be incorporated into new additions/amendments to the manual. ZKTeco reserves the right to add, delete, amend or modify the information contained in the manual from time to time in the form of circulars, letters, notes, etc. for better operation and safety of the machine/unit/equipment. The said additions or amendments are meant for improvement /better operations of the machine/unit/equipment and such amendments shall not give any right to claim any compensation or damages under any circumstances.

ZKTeco shall in no way be responsible (I) in case the machine/unit/equipment malfunctions due to any non-compliance of the instructions contained in this manual (ii) in case of operation of the machine/unit/equipment beyond the rate limits (iii) in case of operation of the machine and equipment in conditions different from the prescribed conditions of the manual.

The product will be updated from time to time without prior notice. The latest operation procedures and relevant documents are available on http://www.zkteco.com

If there is any issue related to the product, please contact us.

ZKTeco Headquarters

Address ZKTeco Industrial Park, No. 32, Industrial Road,
Tangxia Town, Dongguan, China.

Phone +86 769 - 82109991

Fax +86 755 - 89602394

For business-related queries, please write to us at: sales@zkteco.com.

To know more about our global branches, visit www.zkteco.com.

Copyright © 2023 ZKTECO CO., LTD. All Rights Reserved.

About the Company

ZKTeco is one of the world's largest manufacturer of RFID and Biometric (Fingerprint, Facial, Finger-vein) readers. Product offerings include Access Control readers and panels, Near & Far-range Facial Recognition Cameras, Elevator/floor access controllers, Turnstiles, License Plate Recognition (LPR) gate controllers and Consumer products including battery-operated fingerprint and face-reader Door Locks. Our security solutions are multi-lingual and localized in over 18 different languages. At the ZKTeco state-of-the-art 700,000 square foot ISO9001-certified manufacturing facility, we control manufacturing, product design, component assembly, and logistics/shipping, all under one roof.

The founders of ZKTeco have been determined for independent research and development of biometric verification procedures and the productization of biometric verification SDK, which was initially widely applied in PC security and identity authentication fields. With the continuous enhancement of the development and plenty of market applications, the team has gradually constructed an identity authentication ecosystem and smart security ecosystem, which are based on biometric verification techniques. With years of experience in the industrialization of biometric verifications, ZKTeco was officially established in 2007 and now has been one of the globally leading enterprises in the biometric verification industry owning various patents and being selected as the National High-tech Enterprise for 6 consecutive years. Its products are protected by intellectual property rights.

About the Manual

This manual introduces the operations of **TS2200 Pro Series Tripod Turnstile**.

All figures displayed are for illustration purposes only. Figures in this manual may not be exactly consistent with the actual products.

Features and parameters with ★ are not available in all devices.

Copyright © 2023 ZKTECO CO., LTD. All Rights Reserved.

Document Conventions

Conventions used in this manual are listed below:

GUI Conventions

For Software	
Convention	**Description**
Bold font	Used to identify software interface names e.g. **OK**, **Confirm**, **Cancel**.
>	Multi-level menus are separated by these brackets. For example, File > Create > Folder.
For Device	
Convention	**Description**
< >	Button or key names for devices. For example, press <OK>.
[ ]	Window names, menu items, data table, and field names are inside square brackets. For example, pop up the [New User] window.
/	Multi-level menus are separated by forwarding slashes. For example, [File/Create/Folder].

Symbols

Convention	Description
	This represents a note that needs to pay more attention to.
	The general information which helps in performing the operations faster.
	The information which is significant.
	Care taken to avoid danger or mistakes.
	The statement or event that warns of something or that serves as a cautionary example.

Copyright © 2023 ZKTECO CO., LTD. All Rights Reserved.

Table of Contents

1 OVERVIEW 7

1.1 FEATURES 8
1.2 APPEARANCE AND SYSTEM COMPONENTS 8
1.2.1 APPEARANCE 8
1.2.2 SYSTEM COMPONENTS 9
1.3 MODEL NUMBER AND ACCESS CONTROL 9
1.4 MECHANICAL SYSTEM 10
1.5 ELECTRONIC CONTROL SYSTEM 10
1.6 POWER-ON SELF-TEST 10
1.7 STATUS OF TRAFFIC INDICATOR 11
1.8 WORKING PRINCIPLE 11
1.9 TECHNICAL SPECIFICATIONS 12

2 FUNCTION INTRODUCTION 13

2.1 CARD VERIFICATION ★ 13
2.2 FINGERPRINT VERIFICATION★ 14
2.3 WIRED REMOTE CONTROL★ 15
2.4 WIRELESS REMOTE CONTROL★ 18

3 CONTROL SYSTEM INTRODUCTION 20

3.1 WIRING DIAGRAM 20
3.2 TURNSTILE CONTROL BOARD 21
3.3 ACCESS CONTROL BOARD 24

4 DEFAULT PARAMETERS 27

5 TROUBLESHOOTING 28

6 PRECAUTION 29

7 MAINTENANCE 31

7.1 CHASSIS MAINTENANCE 31
7.2 MOVEMENT MAINTENANCE 31
7.3 POWER SUPPLY MAINTENANCE 31

8 PACKING LIST 32

Copyright © 2023 ZKTECO CO., LTD. All Rights Reserved.

1 Overview

The TS2200 Pro series is one kind of ZKTeco's innovative semi-automatic tripod turnstile series. It features a dual-core design, making it an affordable and practical products. The shell is made of high quality 304 stainless steel, and the parts are treated with anti-corrosion coating for enhances durability. The top cover panel of the TS2200 Pro series, which integrated general access control, is customizable based on different verification modes. It can support controller★, RFID reader★ or fingerprint reader★, depending on the specific requirements. Additionally, thanks to its small and compact body design, the TS2200 Pro series operates smoothly and quietly while consuming minimal power.

Our Pro series tripod turnstiles represent a classic and reliable solution for safeguarding your premises. They are extensively utilized in a wide range of indoor environments due to their versatility. These turnstiles are an ideal economical choice for office buildings and other similar applications, seamlessly integrating into the overall setting.

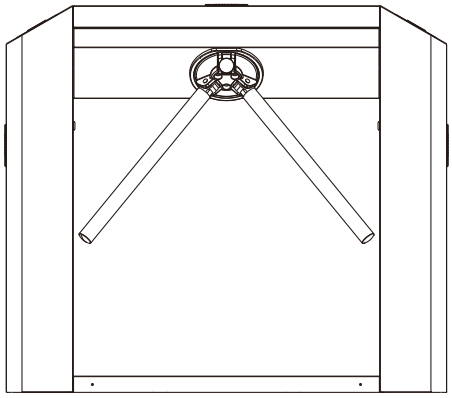

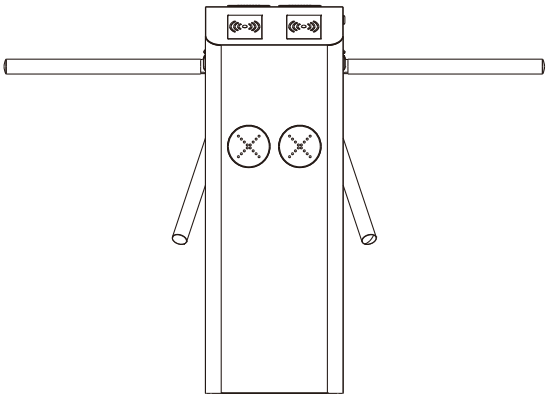

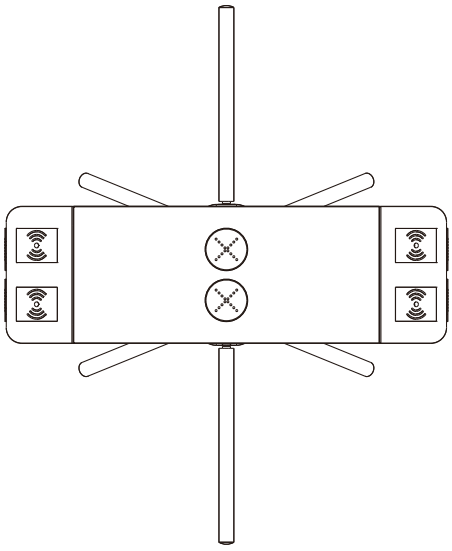

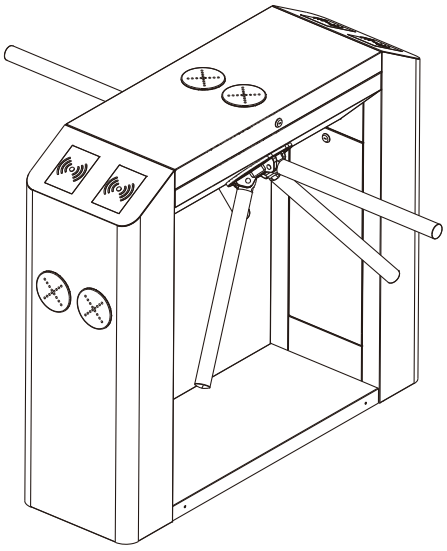

Copyright © 2023 ZKTECO CO., LTD. All Rights Reserved.

1.1 Features

- Long service life, capable of opening and closing the gate more than 2 million times when measured.
- Drop arm automatically during power off.
- Self-protection function to prevent strong intrusion, excessive current and other special circumstances, such as damage to the product, death, etc.
- Support fire linkage, allowing them to drop the arm in case of a fire signal received, accompanied by an emergency alarm prompt.
- SUS304 stainless steel housing.
- LED pictograms for intuitive user experience and high throughput in both directions
- High quality at an affordable price.
- Low power consumption.
- Easy and simple installation process.

1.2 Appearance and System Components

1.2.1 Appearance

The appearance and dimensions of the TS2200 Pro series are shown in the figure below:

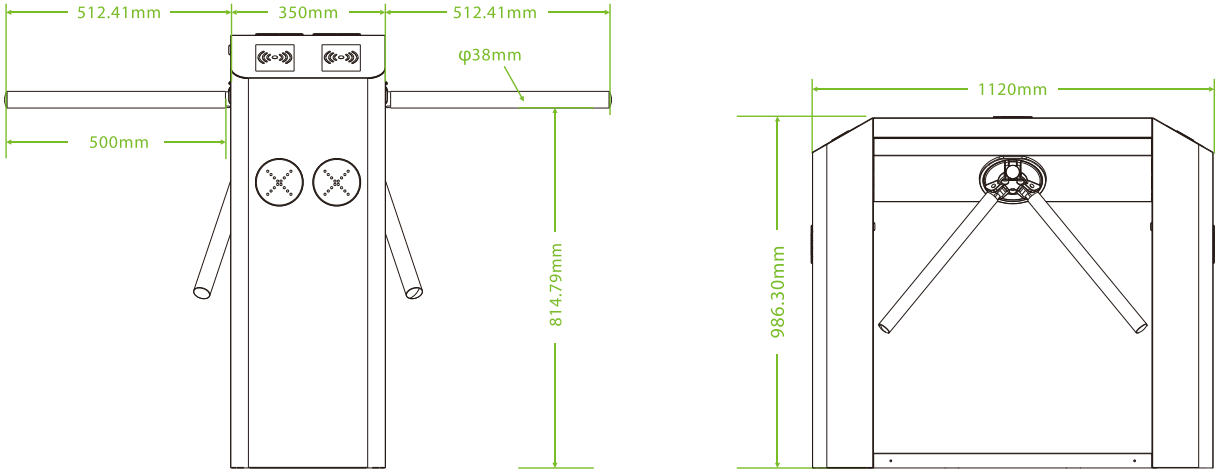

Copyright © 2023 ZKTECO CO., LTD. All Rights Reserved.

1.2.2 System Components

The system components of the TS2200 Pro series are shown below:

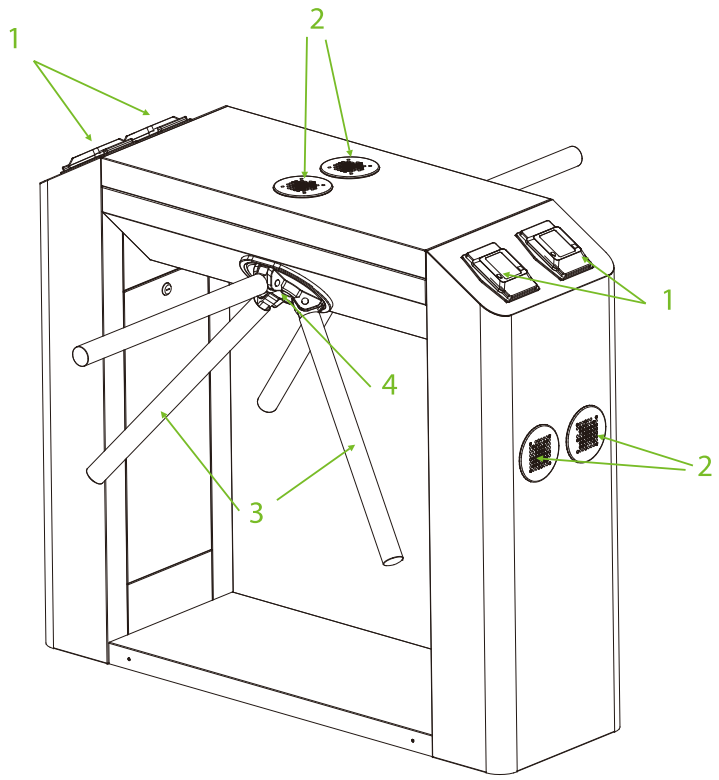

1. Verification Units	**2. Traffic Indicator**
3. Arm	**4. Disk Wheel**

1.3 Model Number and Access Control

Model No.	Controller	RFID Reader	Fingerprint Reader
TS2200 Pro			
TS2211 Pro	√	√	
TS2222 Pro	√	√	√

Copyright © 2023 ZKTECO CO., LTD. All Rights Reserved.

1.4 Mechanical System

The mechanical system of the tripod turnstile consists of the chassis and the core components. The chassis serves as a carrier for the installation of the Traffic Indicator, RFID Reader★, Fingerprint Reader★ and Door lock.

1.5 Electronic Control System

The electronic control system of a tripod turnstile mainly consists of the RFID Reader★/Fingerprint reader★, Turnstile control board and Traffic Indicator.

RFID Reader★: The reader reads the data on the card and transmits it to the Access Controller.

Fingerprint Reader★: The device compares the fingerprint being pressed onto the fingerprint reader with the stored fingerprint data and transmits it to the Access Controller.

Turnstile Control Board: The turnstile control board serves as the control center of the system, receiving signals from the reader and the dry contact. It performs logical calculations and processing of these signals, and subsequently sends executive commands to the traffic indicator and the arm.

Traffic Indicator: The system will illuminates the red indicator when the gate is closed. When someone passes the verification, the system will illuminates the green indicator.

1.6 Power-On Self-Test

1. Please make sure that the power requirements are strictly to avoid permanent damage to the unit. Input voltage: AC 100 to 120V /200 to 240V. **Note:** The tripod turnstile must be connected to the ground (earth).
2. Power on the tripod turnstile and wait 30s to complete the self-check program.
3. Lift the arms manually, as shown in the diagram below:

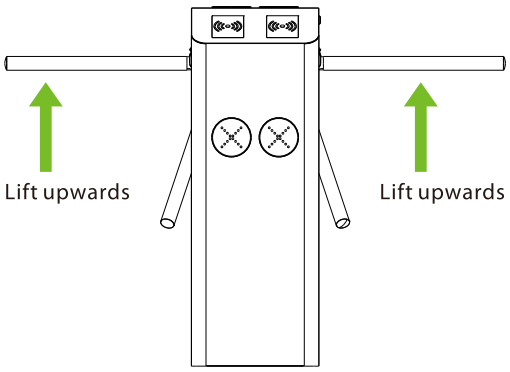

4. Check whether the tripod turnstile and the traffic indicators work properly. If there is any problem, please contact the supplier.

Copyright © 2023 ZKTECO CO., LTD. All Rights Reserved.

1.7 Status of Traffic Indicator

The tripod turnstile is in working state after power-on self-test. The traffic indicators gives pedestrians the corresponding indication of passage.

Standby: ✕

Pass-through (In/Out): ↑

1.8 Working Principle

1. When the device is connected to the power, the system performs the Power-On Self-Test. If no issues are detected during this process, the device will operate normally

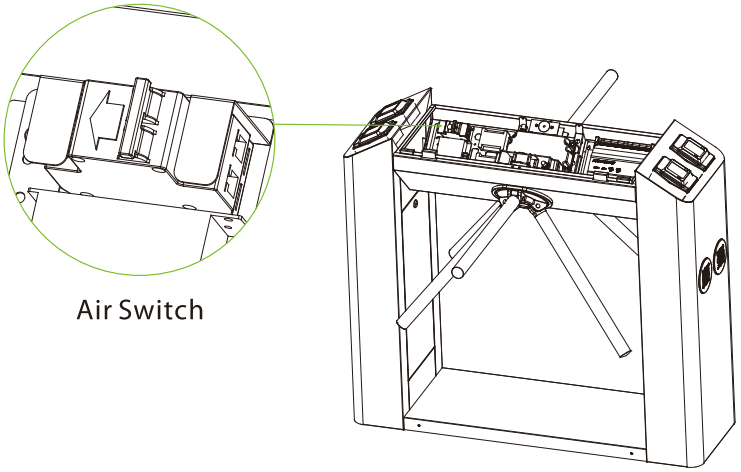

2. When a valid Card★/Fingerprint★ is detected, the traffic indicator will display a green light to indicate successful verification to the pedestrian. And then, the reader sends signals to the Access Controller to request permission to pass through the passage. The Access Controller will send the signal to the master control panel.

3. After receiving the signal from the Access Controller, the turnstile control board sends valid control signals to the solenoid.

4. Pedestrians should follow the traffic indicator and gently push the unlocked arm; the arm will automatically rotate till the pedestrian passes through the channel.

5. If a pedestrian enters the passage without successfully verifying their identification or if their card★/fingerprint★ is invalid, the system will not grant passage. Only when a valid card★ /fingerprint★ is successfully confirmed, the pedestrian will be allowed to pass through the passage.

Note: Make sure the ground wire of the system is reliably connected to avoid personal injuries or other accidents.

Copyright © 2023 ZKTECO CO., LTD. All Rights Reserved.

1.9 Technical Specifications

Feature	Specification
Communication	TCP/IP, RS485, 4G/WIFI
Input Voltage	AC110V/240V, 50/60Hz
Input Control Signal	Dry contact
Output Voltage	DC 12V
Protection Level	IPX4
Time of Gate Opening/Closing	NA
Operating Humidity	5% to 80%
Operating Temperature	-28°C to 60°C
Flow Rate	Normally Close: Maximum 25/minute
Working Environment	Indoor and outdoor (shelter)
MCBF	2 million
Dimension (mm) (L*W*H)	1374*606*986
Weight	Net Weight: 55Kg Gross Weight: 65Kg
Noise	＜60dB
Certifications	CE, FCC and UKCA

Copyright © 2023 ZKTECO CO., LTD. All Rights Reserved.

2 Function Introduction

2.1 Card Verification ★

The Card Verification mode compares the card number in the card induction area with all the card number data registered in the device and sends it to the Access Controller.

When a user places their card on the card reading area, the device enters card authentication mode.

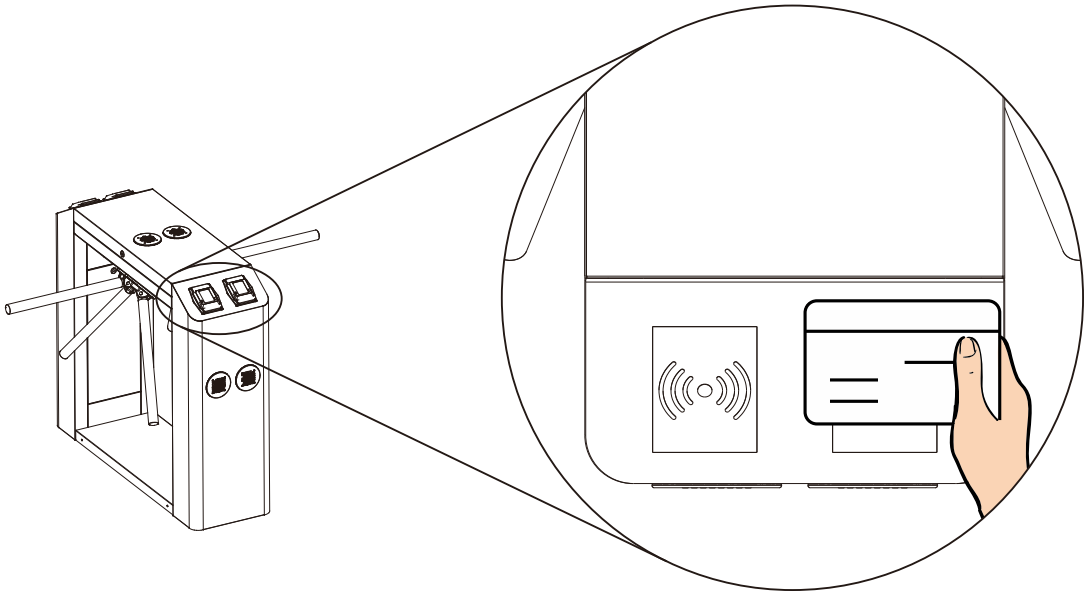

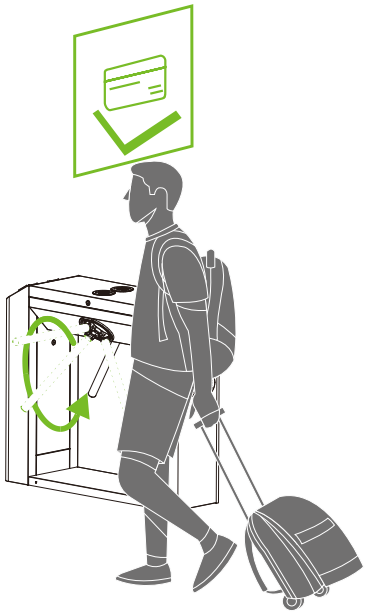

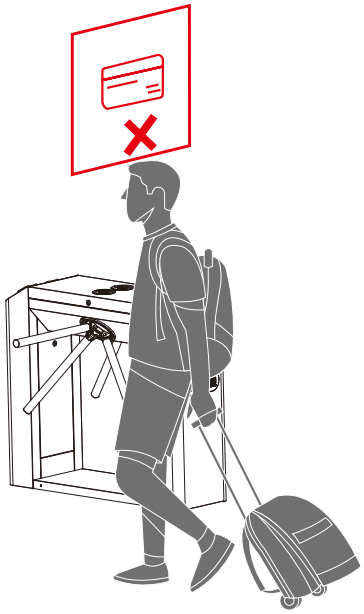

Copyright © 2023 ZKTECO CO., LTD. All Rights Reserved.

2.2 Fingerprint Verification★

In this verification mode, the device compares the fingerprint that is being pressed onto the fingerprint reader with all the fingerprint data sends it to the Access Controller.

When a user places their finger onto the fingerprint scanner, the device enters the fingerprint authentication mode.

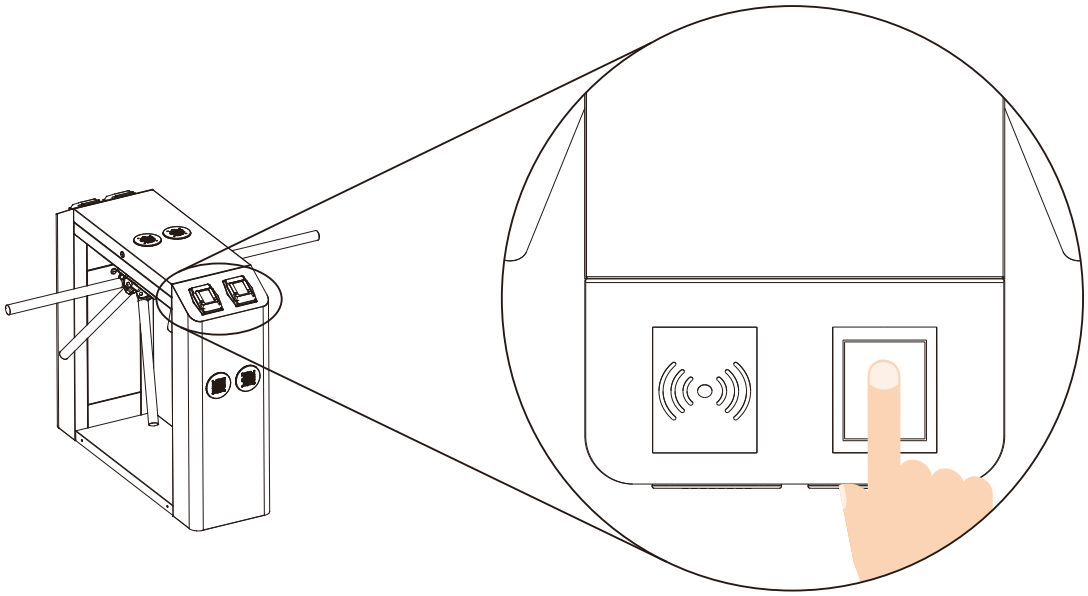

Recommended fingers: It is recommended to use index, middle, or ring finger for registration and avoid using the thumb or little finger, as they are difficult to accurately press onto the fingerprint reader.

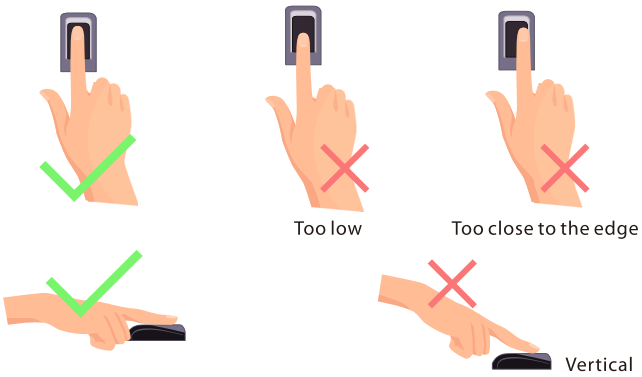

Note: Please use the correct method when pressing your fingers onto the fingerprint reader for registration and identification. Our company will assume no liability for recognition issues that may result from incorrect usage of the product. We reserve the right of final interpretation and modification concerning this point.

Copyright © 2023 ZKTECO CO., LTD. All Rights Reserved.

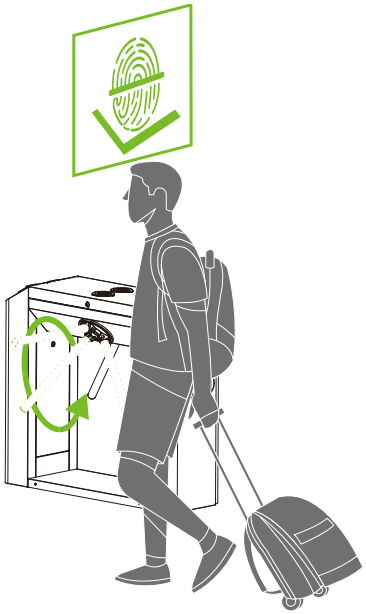

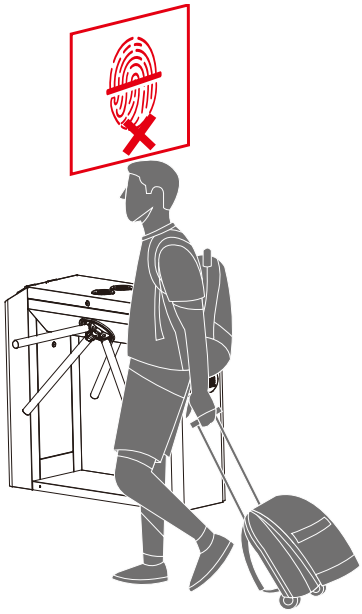

2.3 Wired Remote Control★

The wired remote control has five buttons: the Left button, Right button, Down button, Lock button, and Reset button. These five independent buttons have individual functions as well as combined functions. Pressing two buttons within the specified time interval can call up a predefined mode.

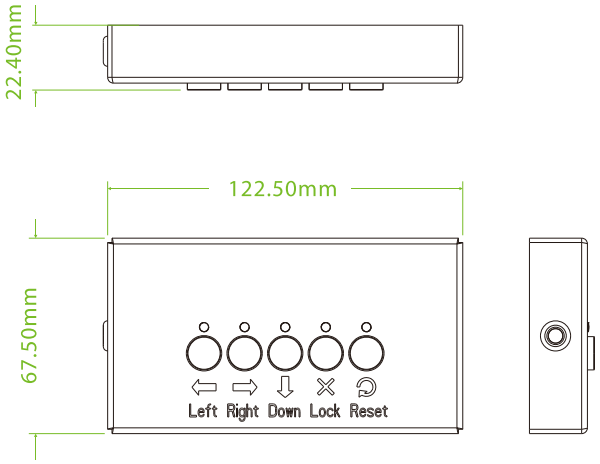

The following tables describe the modes of different button press actions:

1. Independent functions:

Button	Description
⇦	Press the button once to open the tripod turnstile and can pass by identity verification from the inbound.

Copyright © 2023 ZKTECO CO., LTD. All Rights Reserved.

	Press the button once to open the tripod turnstile and can pass by identity verification from the outbound.
	In emergency mode, press the button once to fall the arm lever. Then the inbound and outbound sides get open and can pass freely without identity verification.
	Press the button once to raise the arm lever. Then the inbound and outbound sides are controlled by the tripod turnstile. The identity verification becomes invalid, and no pass is allowed.
	Press a button once to restore the default inbound and outbound identity verification pass mode of the arm.

2. Combined functions:

Status	Description
Inbound free, Outbound control	Press "  " twice to open the tripod turnstile on both sides. The inbound side is free to pass without identity verification and can pass by identity verification from the outbound.
Inbound control, Outbound free	Press "  " twice to open the tripod turnstile on both sides. The outbound side is free to pass without identity verification and can pass by identity verification from the inbound.
Inbound free, Outbound free	Press "  " and "  " at the same time to open the tripod turnstile on both sides and both inbound and outbound sides can pass freely without identity verification.
Inbound forbidden, Outbound free	First press "  " once, and then press "  " once, then the inbound side is forbidden to pass, and the outbound side is free to pass without identity verification.
Inbound free, Outbound forbidden	First press "  " once, and then press "  " once, then the outbound side is forbidden to pass, and the inbound side is free to pass without identity verification.
Inbound control, Outbound forbidden	First press "  " once, and then press "  " once, then the outbound side is forbidden to pass, and the inbound side needs to identity verification to pass.
Inbound forbidden, Outbound control	First press "  " once, and then press "  " once, then the inbound side is forbidden to pass, and the outbound side needs to identity verification to pass.

Copyright © 2023 ZKTECO CO., LTD. All Rights Reserved.

The wired remote control is connected to the controller, then set the controller's code pairing mode to complete the wired remote control's setup.

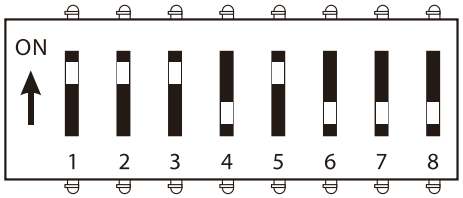

PIN	1	2	3	4	5	6	7	8
Function Setting	Opening Duration			Direction Indication		Continue Passing Function		Alarm
Default	1	1	1	0	1	0	0	0

- **Setting the Turnstile Opening Duration**

The opening duration refers to the time interval from the moment the turnstile receives an open signal to when it closes. In the DIP switch settings, numbers 1, 2, and 3 are utilized for configuring the duration. The available values can be adjusted within the range of 5 seconds to 60 seconds, as indicated in the following chart.

Bit Setting	Duration	Bit Setting	Duration
111	5s	011	30s
110	10s	010	40s
101	15s	001	50s
100	20s	000	60s

Note: The turnstile opening duration is set to 5s by default.

- **Direction Indicator**

It is to indicate whether the passage allows people to pass. The green arrow means passing is allowed while the red "X" means passing is prohibited. The indicator status can be set through number 4 and 5 in the DIP switch. The description of the bit settings are as follows:

11 = One-way traffic, left passing is allowed.

10 = One-way traffic, right passing is allowed.

01 = Passing is allowed in both directions.

Copyright © 2023 ZKTECO CO., LTD. All Rights Reserved.

- **Continue Passing Function**

With the Continue Passing function, the turnstile could remember at most 20 swipes of one card at one time and allows up to 20 people to pass so they don't have to swipe card each time, this function can be enabled or disabled through number 6 in the DIP switch. The description of the bit settings are as follows:

In the DIP switch, number 6 is used to enabled or disabled the **Continue Passing Function**, number 7 is used to set the initial value of Continue Passing Function.

Number 6	Number 7	Function	Opening Duration
0	Disabled	Disabled Continue Passing Function	Please consult Setting the Turnstile Opening Duration
1	1	Enabled Continue Passing Function	The initial value is 16s, and the Opening Duration = 16 + (N -1) * 6
	0		The initial value is 8s, and the Opening Duration = 8+ (N -1) * 6

- **Alarm Function (Optional)**

In the DIP K1 switch, number 8 is used to enabled or disabled the **Alarm Function**.

1 = enabled

0 = disabled

Note: Please set to 0 when working normally, that is to say that **Alarm Function** is disabled.

2.4 Wireless Remote Control★

The tripod turnstile's wireless remote control is an intelligent device that remotely controls the entrance and exit. It is designed for the administrator to control the tripod turnstile manually. The wireless remote control contains four buttons: A, B, C, and D, which correspond to the options open entrance gate, open exit gate, emergency mode open-bar pass, and alarm lock.

Copyright © 2023 ZKTECO CO., LTD. All Rights Reserved.

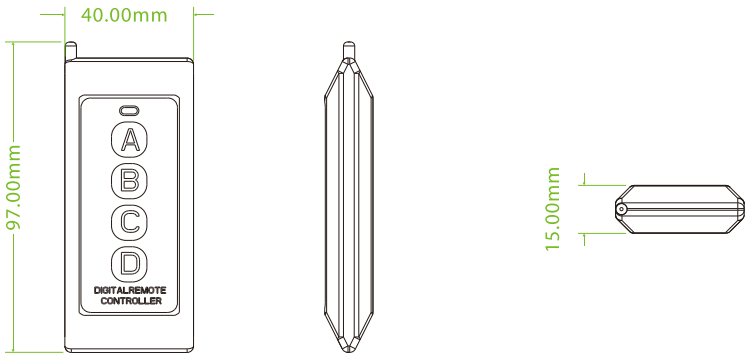

Buttons	Description
A	Press the button once to open the tripod turnstile on the inbound and can pass by identity verification from the inbound.
B	Press the button once to open the tripod turnstile on the outbound and can allow people to pass after their identity verification from the outbound.
C	In emergency mode, press the button once to fall the arm lever. Then the inbound and outbound sides get open and can pass freely without identity verification.
D	Press the button once to raise the arm lever. Then the inbound and outbound sides are controlled by the tripod turnstile. The identity verification becomes invalid, and no pass is allowed.

The wireless remote control is not in communication with the controller when the controller is turned on. Press and hold the controller's DIP switch to enter code pairing mode and operate the remote control using the controller's eight DIP switch codes.

Pair code:

1. First, power the controller of the tripod turnstile.
2. Short press the learning button on the controller, and a light corresponding to the button will flash slowly. Then press any switch on the remote control for acquiring the information. After the successful operation, the light turns off.

Clear code:

Long press the learning button on the three roller gate controller for 3 seconds. The learning light stays on for a while then turns off indicating the code is cleared successfully. The original learning remote control cannot be used again and can only be remote-controlled by the code again.

Copyright © 2023 ZKTECO CO., LTD. All Rights Reserved.

3 Control System Introduction

If you are using TS2211 Pro or TS2222 Pro models, all the connections between the access control and turnstile control boards are already completed at the factory. Just plug in communication cable to access controller and proceed with the necessary settings.

If you are using TS2200 Pro model, it is important to connect access control system to the control board, please check the content in this chapter carefully.

Warning: The lock relay trigger time for the third-party access control system should be set to 1 second or less.

3.1 Wiring Diagram

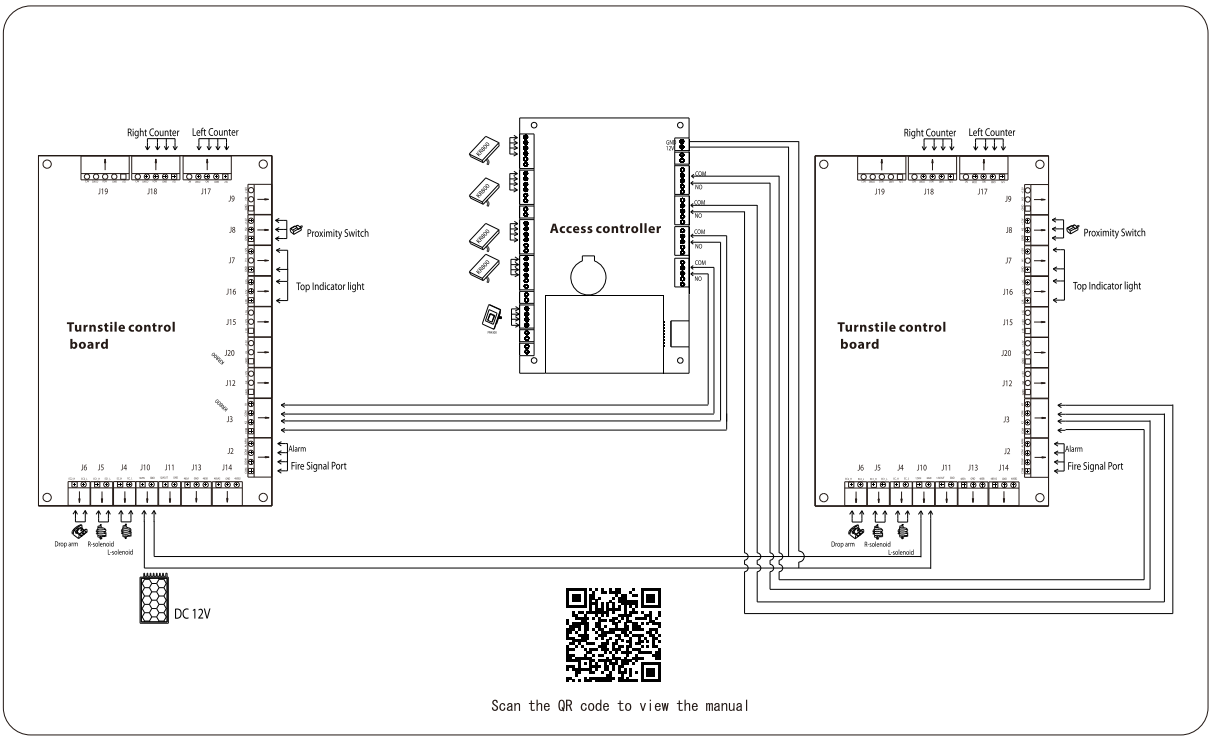

Copyright © 2023 ZKTECO CO., LTD. All Rights Reserved.

3.2 Turnstile Control Board

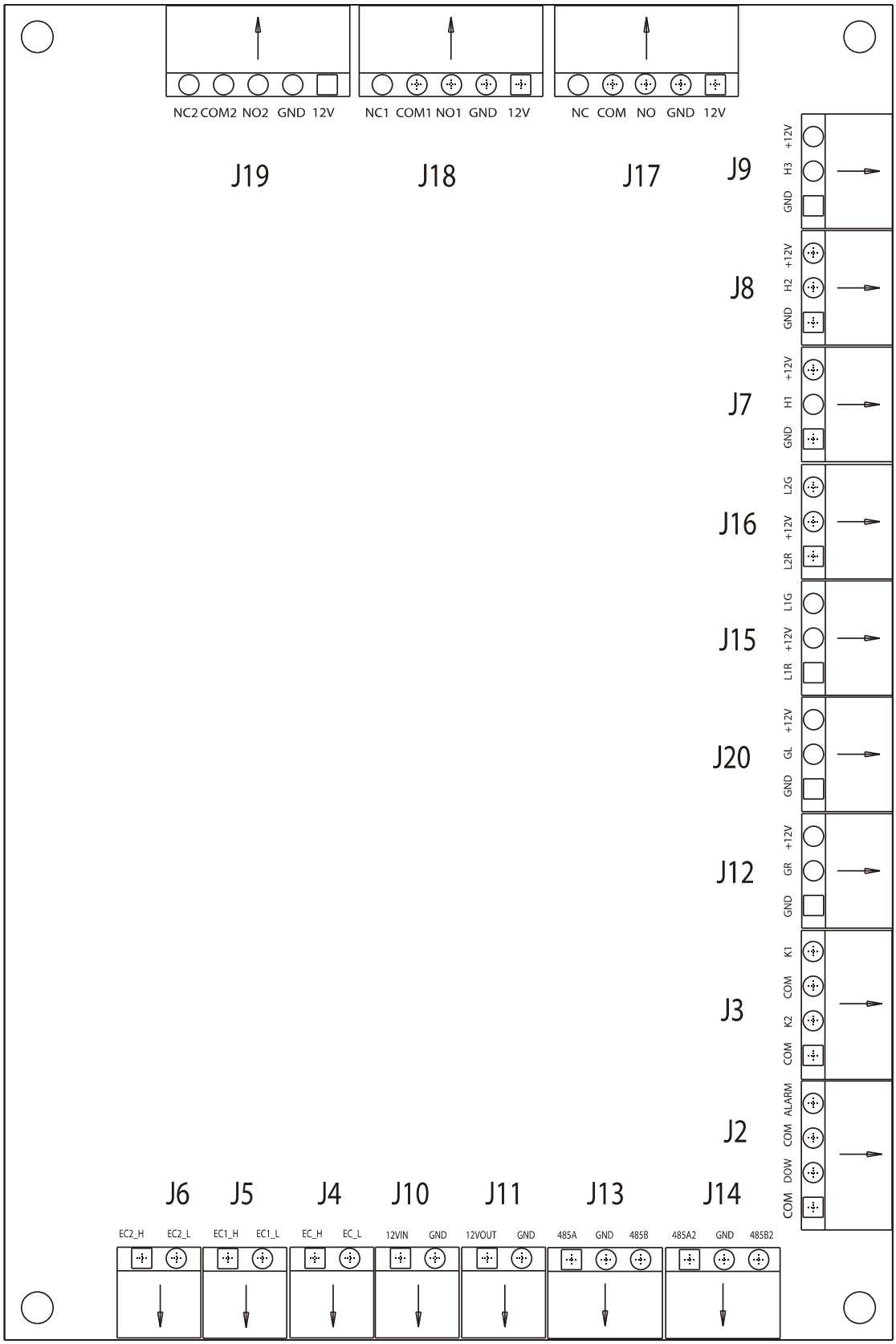

Copyright © 2023 ZKTECO CO., LTD. All Rights Reserved.

Terminal	Description
 J19	Reserved
 J18	Right Counter
 J17	Left Counter
 J9	Reserved
 J8	Proximity Switch
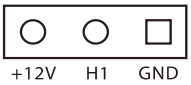  J7 / J6	Top Indicator Light
 J15	Reserved
 J20	Reserved
 J12	Reserved
 J3	Right Open
 J3	Left Open
 J2	Alarm
 J2	Fire Signal

Copyright © 2023 ZKTECO CO., LTD. All Rights Reserved.

	J14	RS485
	J13	RS485
	J11	12V Power Supply Output
	J10	12V Power Supply Input
	J4	L-solenoid
	J5	R-solenoid
	J6	Drop Arm

Copyright © 2023 ZKTECO CO., LTD. All Rights Reserved.

3.3 Access Control Board

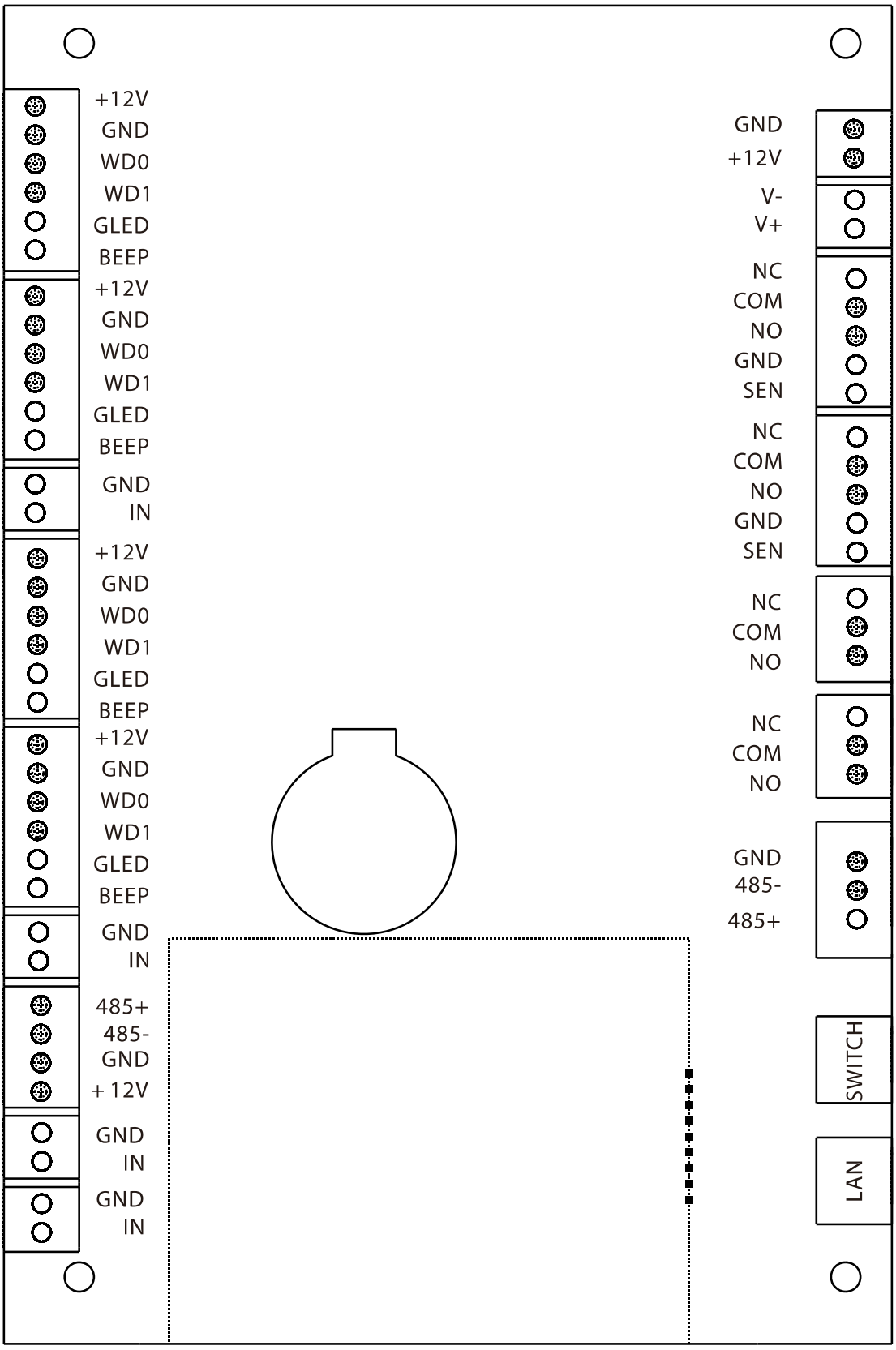

Copyright © 2023 ZKTECO CO., LTD. All Rights Reserved.

Terminal	Description
	Reader
	Reader
	Button
	Reader
	Reader
	Button
	RS485
	Auxiliary Input
	Auxiliary Input
	Power In
	Lock
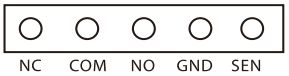	Lock
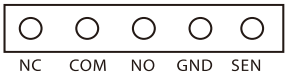	Lock
	Auxiliary Output
	Auxiliary Output
	485 Connections

Copyright © 2023 ZKTECO CO., LTD. All Rights Reserved.

SWITCH	Switch
LAN	Ethernet

Copyright © 2023 ZKTECO CO., LTD. All Rights Reserved.

4 Default Parameters

No.	Function	Default
1	Lock Driving Duration	5s
2	Door Sensor	None
3	Verification Interval	1s
4	Controller Communication	TCP/IP: 192.168.1.201
5	Turnstile Opening Duration	5s
6	Passing Direction Indicator	Passing is allowed in both directions
7	Continue Passing Function	Disabled
8	Alarm Function	Disabled

Note: The default Lock Driving Duration is set to 5 seconds. To adjust it to 1 second, please modify the settings accordingly.

Copyright © 2023 ZKTECO CO., LTD. All Rights Reserved.

5 Troubleshooting

Failure Description	Solution
The indicator is not lighted when the equipment is powered on	It may be caused by the power supply or circuit. • Check whether the connection cable and power cable between are damaged, or the wiring is loose.
The device can't be manually lift arm after powering on	• Check whether the limit seat is properly aligned with the the disk wheel when lifting the arm. • Check whether the arm drop magnet is working properly, open the upper cover of the chassis, open the movement cover with a hexagonal screwdriver and check the working status of the electromagnet.
No gate opening after authentication	• Check whether the user has permission. • Please refer to the 3 wiring diagram to check the wiring.
After opening the gate, the passage is not smooth, the resistance of the push rod is large, and the rotation cannot be homed	• The tension spring can be adjusted by adjusting the live joint bolt at the tension spring.
Dropping the arm during use	• Check if the limit seat is properly aligned or if there is a gap. • Check whether the arm drop magnet is fully engaged. If it is not fully engaged, please power off for 2 minutes and then power on.
Continuous single-sided passage during use, without locking the lever.	• Check if the gate opening magnet is working propeerly, open the top cover of the device and open the movement cover with a hexagonal screwdriver. Check if the gate opening magnet is stuck or the shrapnel is disconnected.

Copyright © 2023 ZKTECO CO., LTD. All Rights Reserved.

6 Precaution

1. It is recommended to purchase optional accessories to use in outdoor environment.

   a) Optional cooling fans should be installed for the equipment if the working temperature is frequently above 50 °C.

   b) It is equivalent to IPX4 waterproof under proper installation. However, it cannot work in the region that may suffer typhoon.

   c) If the temperature reaches -30 °C, it is recommended to install a heating plate. It might need multiple times to power on while getting hot automatically through the self-check program.

   d) The service life of this equipment may be reduced if it is used outdoors in coastal areas or regions prone to acid rain.

2. If the power and signal cables are connected properly, this equipment can be submerged in water up to a depth of 250 mm, but it must not be powered on for operating when it is submerged in water.

3. It is highly recommended that a card swiping warning line to set for prompting passers-by to swipe cards properly and a reasonable passage width shall be set to prevent passers-by from squeezing in illegally.

4. It is recommended that a warning sign is placed at a conspicuous position, and prompt: "**Please swipe your card outside the warning line and pass in order. Thank you!**"

The maximum tolerance of the tripod turnstile's arms

Please note that the maximum stress tolerance at the center of the arm is 80kg and at the ends of the arm is 40kg. When the impact force on the tripod turnstile reaches the designed limit, the arms will break down first to prevent damage to the entire equipment and ensure the safety of passers-by.

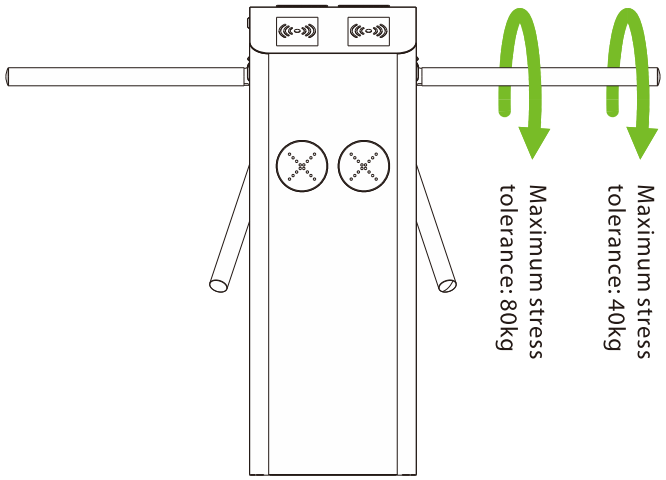

Copyright © 2023 ZKTECO CO., LTD. All Rights Reserved.

In case of emergencies

This equipment is designed to automatically lower the arms in the event of a power failure, allowing the passage to be open for the public. Additionally, the turnstile control board provides an interface to connect an emergency switch (Drop Arm), which keeps the tripod turnstile in an open position during emergencies. Please note that after power is restored, it is important to wait for more than 6 seconds before lifting the arms manually.

Copyright © 2023 ZKTECO CO., LTD. All Rights Reserved.

7 Maintenance

7.1 Chassis Maintenance

The chassis is made of SUS304 stainless steel or cold rolled sheet steel. If it has been used for a long time, the surface may develop rust stains. It is recommended to clean the surface regularly with a clean cloth. Additionally, apply a coat of anti-rut oil to the surface, ensuring not to cover the infrared sensor.

7.2 Movement Maintenance

Before doing maintenance, turn off the power. Open the door, wipe the surface dust, and apply lubricant for smooth movement.

7.3 Power Supply Maintenance

- Switch off the power supply before maintenance.
- Check the power plug connection, if found loose, fix it properly.
- Do not change any connection position randomly.
- Check the external power supply insulation periodically.
- Do periodic check for any kind of leakage.
- Check if the technical parameters of interface are normal.
- Check the service life of the electronic components and replace accordingly.

Caution: All the maintenance methods mentioned above for swing barrier should be performed by a professional technician, particularly when dealing with the movement and electric control components. To ensure operational safety, it is crucial to switch off the power supply when the barrier is not in use.

Copyright © 2023 ZKTECO CO., LTD. All Rights Reserved.

8 Packing List

The package consists of the following items:

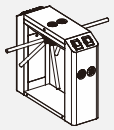	TS2200 Pro Series	1
	Power Cable	1
	Card (TS2211 Pro, TS2222 Pro)	1
	Expansion Screw M12*100	6
	Stainless Steel Maintenance Wipes	1
	Hex Wrench	1
	Allen Screw	3
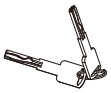	Key	2
	Washer	6

Copyright © 2023 ZKTECO CO., LTD. All Rights Reserved.

ZKTeco Industrial Park, No. 32, Industrial Road,

Tangxia Town, Dongguan, China.

Phone : +86 769 - 82109991

Fax : +86 755 - 89602394

www.zkteco.com

Copyright © 2023 ZKTECO CO., LTD. All Rights Reserved.